Scotsman®

SERVICE MANUAL

MF/MFN 88

Modular superflaker/nugget split

Scotsman Ice Srl
Via Lainate, 31 - 20010 Pogliano M.se - Milano - Italy
Tel. +39-02-93960.1 (Aut. Sel.)- Telefax +39-02-93550500
Direct Line to Service & Parts:
Phone +39-02-93960350 - Fax +39-02-93540449
Website: www.scotsman-ice.it
E-Mail: scotsman.europe@scotsman.it

ICIM ISO 9001 - Cert. n. 0080

MS 1000.28 REV. 04/2019

TO BE USED JUST
BY THE INSTALLER

TABLE OF CONTENTS

	Table of contents	page	3
	Specifications		4
Section I	**GENERAL INFORMATION AND INSTALLATION**		
	Introduction		6
	Description		6
	Sealed refrigerant system		6
	Storage bin or ice room		6
	Unpacking and iInspection		6
	Location and levelling		6
	Electrical connection		7
	Water supply and drain connection		7
	Final check list		8
Section II	**OPERATING INSTRUCTIONS**		
	Pre-start inspection		8
	Start up		8
Section III	**PRINCIPLES OF OPERATION - HOW IT WORKS**		
	ICE MAKER		9
	Water		9
	Ice		9
	Refrigeration		9
	ELECTRICAL/REFRIGERATION		10
Section IV	**ADJUSTMENT, REMOVAL & REPLACEMENT PROCEDURES**		12
Section V	**SERVICE DIAGNOSIS**		15
Section VI	**WIRING DIAGRAMS**		17
	Wiring Diagram MF/MFN 88		18
Section VII	**MAINTENANCE AND CLEANING INSTRUCTIONS**		20

SPECIFICATIONS

MF/MFN 88

Important operating requirements:

	MINIMUM	MAXIMUM
• Air temperature	10°C (50°F)	40°C (100°F)
• Water temperature	5°C (40°F)	35°C (100°F)
• Water pressures	1 bar	5 bar
• Electrical voltage variation voltage rating specified on nameplate	-10%	+10%

Extended periods of operation exceeding these limitations constitutes misuse under the terms of Scotsman Manufacturer's Limited Warranty, resulting in a loss of warranty coverage.
We reserve the right to make product improvement at any time. Specifications and design are subject to change without notice.

ice making capacity

MF 88

AIR COOLED MODELS

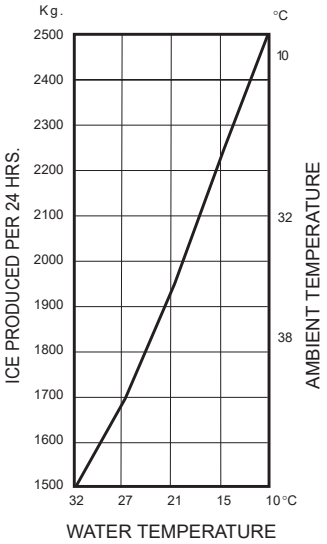

MFNS 88

AIR COOLED MODELS

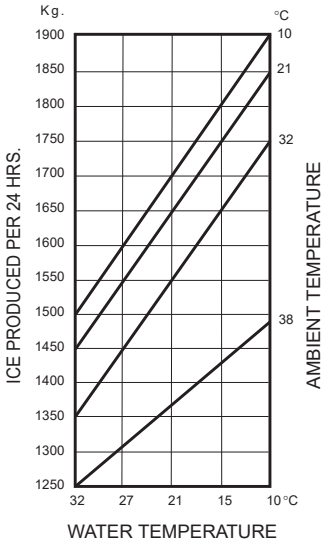

MFNL 88

AIR COOLED MODELS

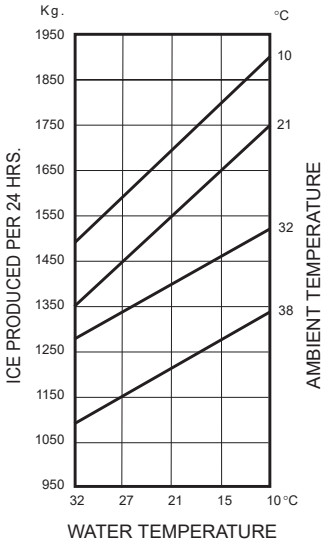

***NOTE**. Daily ice capacity is directly related to condenser air and water inlet temperature, water temperature to make ice - and age of machine.*
To keep your machine performing at its maximum capacity it is necessary to perform periodic maintenance as outlined on Maintenance & Cleaning Section of this manual.

SPECIFICATIONS (CONT'D)

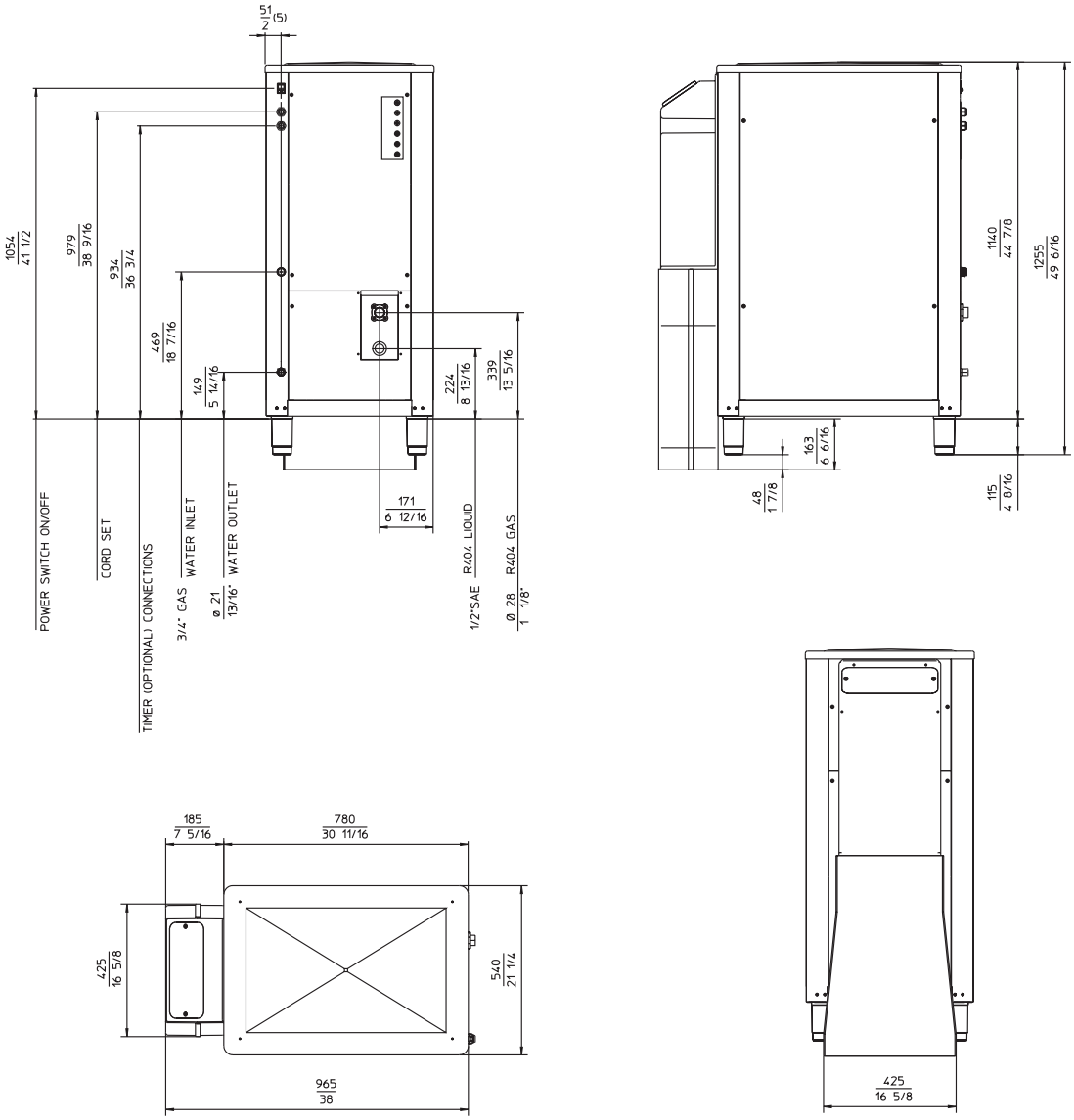

Dimensions:

HEIGHT:	1140 mm
HEIGHT (with legs):	1290 mm
WIDTH:	540 mm
DEPTH:	780 mm
NET WEIGHT:	250 Kg

MF/MFN 88 - SPLIT - MACHINE SPECIFICATIONS

Basic electrical	Max Fuse Size	Refrigerant	Drive Motor	Cooling Reg. at -24°C / +40°C	Ice Type
230/50/3N 400/50/3N	5A	R404a	2.65 Amps/1410 rpm 1.53 Amps/1410 rpm	7050 Kcal/hr 8200 W 28000 Btu/h	SUPER FLAKE / NUGGET

SECTION I

GENERAL INFORMATION & INSTALLATION

INTRODUCTION

This manual provides the specifications and the step-by-step procedures for the installation, start-up, operation and maintenance and cleaning of the SCOTSMAN Model MF/MFN 88.
The Model MF/MFN 88 is a quality designed, engineered, constructed and throughly tested icemaking system, providing the utmost in flexibility to fit the needs of a particular user.

DESCRIPTION

The Scotsman MF/MFN 88 - continuous flow ice maker - consists of one large capacity flake ice making system contained within a compact cabinet entirely in stainless steel. The flake ice produced is extruded through an ice discharge opening. All panels are removable to allow easy access to electrical and mechanical components for cleaning and maintenance.

SEALED REFRIGERANT SYSTEM

The freezer auger is driven by a gear motor assy. The refrigerant used is R 404 A controlled by an automatic expansion valve.

STORAGE BIN OR ICE ROOM

Since the MF/MFN 88 is a continuous flow type ice maker and does not have its own attached storage bin, it is necessary to use an auxiliary bin or prefabricated ice room for appropriate ice storage. An insulated ice storage bin or room is always required, then - according to ice applications - this can be refrigerated or non-refrigerated; a weight/volume ratio of 1,8 m^3 per ton must be taken into consideration for correct ice storage room design which, in any case, should be dimensioned to accomodate a minimum of 16 hrs. ice production.

UNPACKING AND INSPECTION

1. Call your authorized SCOTSMAN Distributor or Dealer, for proper installation.

2. Visually inspect the exterior of the shipping container and skid and any severe damage noted, should be reported to the delivering carrier; and, a concealed damage claim filled in subjetct to internal inspection, with carrier representative present.

3. Remove the packing, and the shipping base or skid.

4. Remove screws and shipping tape, and service panels from the cabinet, and inspect for any concealed damage.
Notify carrier of any concealed damage claims, as stated in step 2 above.

5. Remove all internal support packing, tape and wires in machinery compartment.

6. Check that refrigerant lines do not rub or touch lines or other surfaces, and that fan blades, if any, move freely.

7. Use clean damp cloth or disposable paper wiper to pipe clean the exterior surfaces of the cabinets.

8. See DATAPLATE on the cabinet base and check that the location source voltage corresponds with the voltage specified on the dateplate.

CAUTION. Unproper voltage supplied to the ice Maker will void your parts replacement program.

9. Remove the Manufacturer's Registration Card from the User Manual and fill in all spaces including: Model Number and Serial Number taken from the aluminium plate.
Forward the completed, self addressed, registration card to the Frimont Factory.

LOCATION AND LEVELLING

WARNING. This unit must be installed in an area where it will not freeze and protected from the elements such as wind, rain, water spray or drip. Ambient temperature limitations are: 10 °C (50 °F) minimum and 40 °C (100 °F) maximum, while water temperature limitation are: 5°C (40 °F) minimum and 35 °C (90 °F) maximum. Ambient and water temperature exceeding these limitations may result in machine malfunction and the loss of warranty coverage.

Make sure that the structure on which the ice maker will be located be on a solid footing and supports at least 700 Kgs.
This ice maker is designed for free standing application only. Do not built it in. Make sure that location site is well ventilated to ensure correct operation. Also allow 20 cm clearence in back and both side of the ice maker to be able to easily perform service inspections and operations.

1. Erection - For elevation of machine to its stand or location, fork lifttrucks should be used.

2. Position the MF/MFN 88 in the selected permanent location and level the cabinet on both the left-to right anf front-to-rear direction.

3. Ice chute to convey the ice from the outlet of the machine to the ice storage area is supplied with the machine.

4. Thermostat capillary tube must be positioned so that its end extends out the ice chute opening or the ice deflector and get easily in contact with the cone formed by the ice deposited in the storage room, before - anyway - that ice builds-up in the chute.
Thermostat capillary tube is coiled behind the control box, it must be routed to follow the ice chute or ice deflector and protrude for a certain extension beyond the ice discharge opening in the storage room. Use caution when routing this capillary to prevent kink or to bent it excessively. Coil excess capillary inside ice maker cabinet. Tape coil to prevent vibration againt another part.

ELECTRICAL CONNECTION

See machine electrical specifications in Unit Nameplate and at page 5 of this Service Manual to determine wire size to be used for electrical supply. This unit must be grounded according to all Electrical Codes and local ordinances. Provide a fuse disconnect box within sight and easy-reach of the ice maker. Use timed fuses on all terminals.
The maximum allowable voltage variations should not exceed ten percent of the nameplate rating, even under starting conditions. Low voltages can cause erratic operation and may be responsible for serious damages to the overload switch and motor winding.

WATER SUPPLY AND DRAIN CONNECTIONS

A. The recommended water supply line is a 3/4 inch O.D. fitting. Connect to cold water supply line with standard plumbing fittings, with a shutoff valve installed in an accessible place between the water supply and the Cabinet.
In some cases, a plumbing permit and services of a licensed plumber will be required.

CAUTION - This ice maker is equipped with a low water pressure safety device which, in the event of low water pressure, will automatically stop the ice maker to prevent damage. The ice maker will automatically restart with increased water pressure.
This ice maker will not operate properly when water supply temperatures are below 5°C (40°F) and above 35°C (90°F).

NOTE. Water supply must be installed to conform with local plumbing codes. In some cases, a plumbing permit and services of a licensed plumber will be required.

B. WATER DRAIN

The recommended drain tube is a plastic or flexible tube with 18 mm (3/4") I.D. which runs to an open trapped and vented drain.

FINAL CHECK LIST

1. Is the Cabinet level? (IMPORTANT)

2. Have all electrical and piping connections been made?

3. Is there an electrical service disconnect within sight of the installed machine?
Has the voltage been tested and checked against the nameplate rating?

4. Is the water supply line shutoff valve installed near the machine.

5. Have all the wires been checked for looseness and thightness.

6. Has the owner/user been instructed on how to operate the Icemaker.

7. Has the Manufacturer's registration Card been properly filled out? Check for correct Model and serial numbers from Serial nameplate, then mail the completed card to the FRIMONT factory.

8. Check all refrigerant linea and conduit lines, to guard against vibration or rubbing and possible failure.

9. Is there at last 20 cm. clearance behind and around Cabinet for proper air circulation?

10. Is the Icemaker installed indoor in a location where ambient temperatures are a Minimum of 10°C (50-degrees F.) all year around?

11. Has water supply pressure been checked to insure a minimum of 1 atm (14 PSI).

12. Verify that unit lighted switch is in the OFF position.

13. Has the owner been given name and telephone number of the authorized SCOTSMAN Service Agency.

SECTION II

OPERATING INSTRUCTIONS

PRE-START INSPECTION

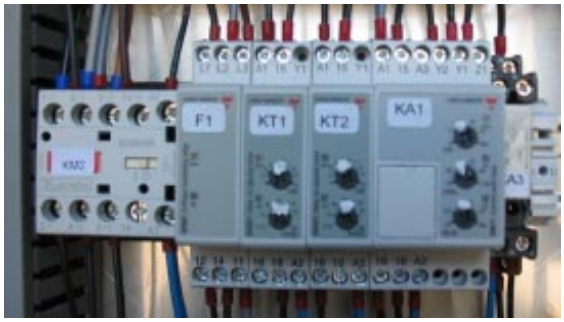

Verify that drive motor current limiter GAVAZZI DIB71 (KA1), located in control box on side of contactor (KM2), has the following setting.

	MF 88 - MFN 88	
	400V	230V
HYS	6	6
LEVEL	80% - 1,6 Amps	50% - 2,5 Amps
DELAY	2 sec.	2 sec.

Dip switch (under cover):

400 V all in ON position

230 V dip Sw 1 in OFF position, 2 → 6 in ON position.

START-UP

The following procedure can only be started after pre-start inspection has been properly completed.

1. Open the water supply line shutoff valve. Observe that water enters the water reservoir, fills the tube from the reservoir to the evaporator and then shut-off. Check for leaks.

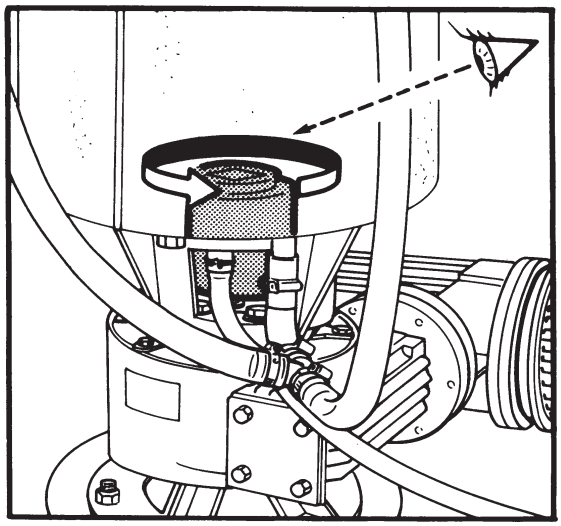

NOTE. *The MF/MFN 88 is equipped with a 3 Phase Monitoring Relay (F1). In case the three phase are connected in wrong way, the machine doesn't start with the simultaneous glowing of the 3 Phase Sequence Protector Warning light. Just reverse two of the three phases on the main plug so to have the correct sequence and by so, the start up of the machine.*

2. After having properly connected the unit to any rack system or dedicated condensing unit, turn ON the ice maker Master Switch, 18 minutes later, after the start up of the drive motor (yellow led of the Time Delay Relay KT1 blinking), the liquid valve opens.

3. After two or three minutes of unit operation observe that flaked ice begins to drop out in the ice spout.

4. Let the system operate for about 30 minutes. Check for any excess noises beyond normal noise:

   a) Vibrating type from touching lines.
   b) Chattering: lack of water in Freezer.

5. If desired, the low side pressure can be checked, it should be 1.7 atm (25 PSI).
Check to see through liquid sight glass for correct refrigerant flow and charge.

6. Evaporator pressure type KVP value opens at a rise in pressure on the inlet side, i.e. when the pressure in evaporator exceeds the set value.

7. Hold a handful of ice around the ice storage bin thermostatic control bulb to test shut-off. Less than one minute is about normal for bulb shut-off function to cause the ice maker to stop (Drive motor after 18 minutes delay - yellow led of KT2 blinking).
Remember that unit will resume operation after 18 minutes that bin thermostat has closed its contacts.

8. There are no adjustments to make, so replace the panels.

9. Throughly explain the owner/user the significant specifications of the ice maker, the start-up, operation and attention to pay going through the procedures in the operating instructions. Answer all questions about the ice maker, by the owner, and inform the owner of the name and telephone number of the authorized SCOTSMAN Service Agency serving him.

SECTION III

PRINCIPLES OF OPERATION - How it Works

ICEMAKER:

Water

The water supply flows from the building source through the enters at the Cabinet fitting and on to the Water Reservoir.
The water Reservoir functions to maintain a constant water level inside the Freezer Assembly. Water from the Water Reservoir enters at the bottom of the freezer Assembly and is changed into ice by low temperatures inside the freezer.

Ice

A stainless steel Auger within the Freezer is powered by a separate drive motor through a speed reducer and the rotating Auger carriers the ice upward to the Ice Breaker assy where excess water is pressed out of the ice, as it is extruded or flaked out through the Ice breaker. The flake ice into spout in diverted out through the ice discharge opening.

Once unit is electrically connected, after 15 minutes starts the automatic and continuous icemaking process. When the Ice touches the Thermostatic Control Bulb, the sensing bulb shuts off the compressor first and 15 minutes later the drive motor.

Refrigeration

At beginning the refrigerant R 404 A is compressed by the compressor into a high temperature gas.
The discharge line directs this gas to the condenser. At the condenser (air or water cooled), the gas is cooled by either air or water and it then condenses into liquid.
This high pressure liquid then goes through the liquid line to the expansion valve. The expansion valve meters liquid refrigerant into the evaporator. At the evaporator, the refrigerant enters an area of relatively low pressure where it can easily "boil-off" or evaporate.

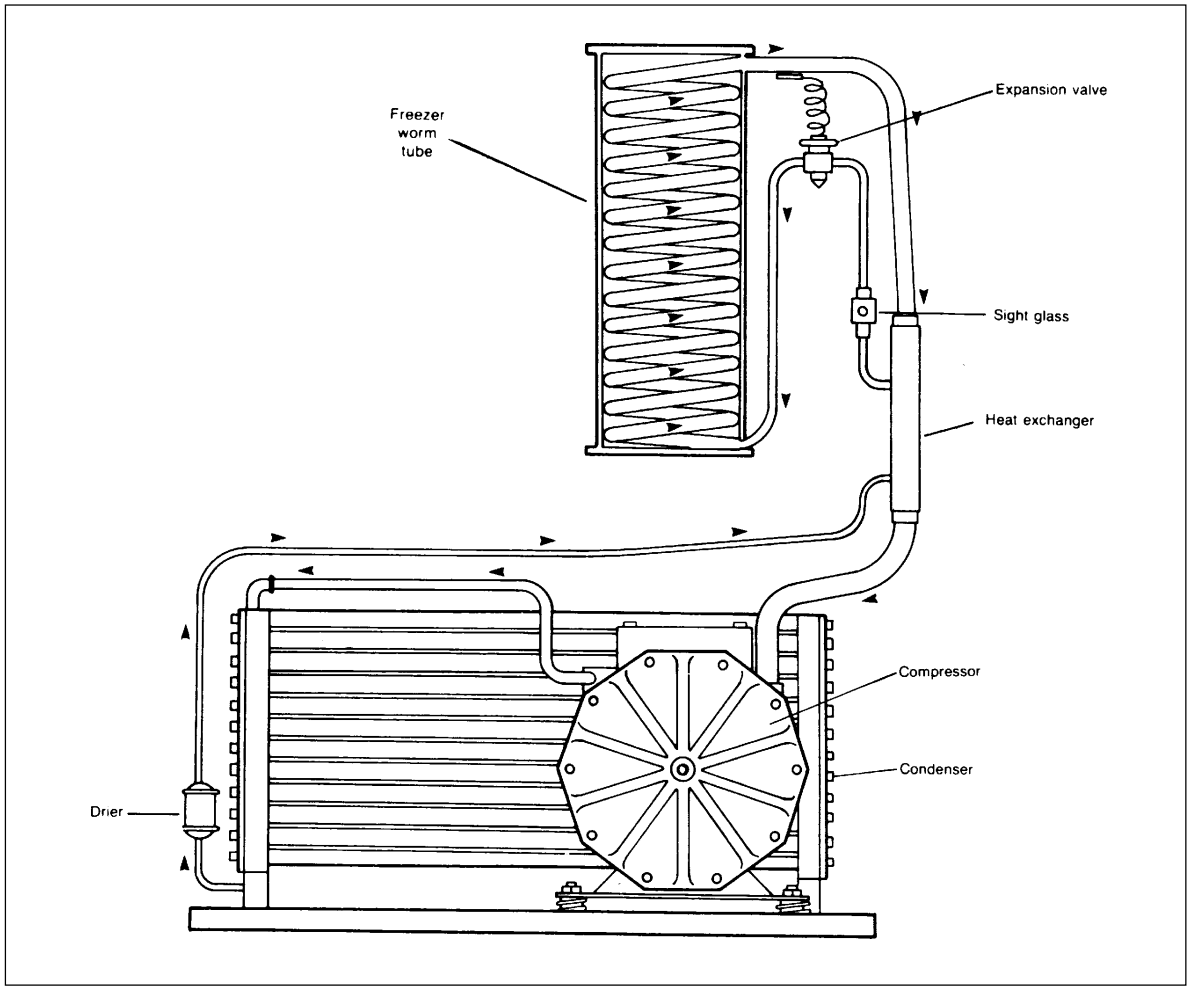

As it evaporates, it absorbs heat from the evaporator and whatever is in contact with it (such as the water inside it). After the evaporator, the refrigerant, now a low pressure vapor, goes through the heat exchanger and suction line back to compressor, where the cycle is repeated.

ELECTRICAL/REFRIGERATION

The MF/MFN 88 Flakers are designed to operate at 400 Volts. 50 Hertz, threephase plus neutral. Special voltage requirements are available on special order.
Therefore, always CHECK NAMEPLATE for electrical information BEFORE proceeding with electrical wiring connections to the Icemaker.
Cold ambient temperatures and interruptions in water supply are conditions that can cause excessively hard ice and overloads within the Freezer Assembly, which is directly trasmmitted to the Drivemotor; and in turn, will cause the intervention of Drive Motor Current limiter.
Master Switch turn the unit ON and OFF every time is switching KT2 time delay relay keep on, in operation the drive motor for 18'.

Spout Switch is mounted on the top of the Ice Spout and is actuated by the movement of the spring retained pressure plate. The spout switch acts as a back-up safety switch, should the termostatic Control Bulb fail and cause ice to jam-up in the ice spout. The switch will shutoff the ice maker when actuated. The Spout Switch can be manually tested by pressing upward the pressure plate.
There are other safety controls in the machine and are:

Liquid Line - Solenoid Valve
Necessary to stop refrigerant flow when not desired to be located on the liquid line past the drier is electrically connected to compressor contactor or relay to stopflooding the evaporator and suctionside during compressor off periods. Supplied.

The low-water pressure Switch functions to discontinue the ice making process whenever incoming water pressure is reduced to below 0.3 bar (4 PSI). The switch will automatically restart the icemaking process when the water pressure is increased to 1 bar (14 PSI).

EPR valve. Evaporator Pressure Regulating Valve. this valve maintains a constant pressure on evap. Inlet regardless of the pressure on the outlet so it keeps the evaporator temperature above a pre-determined value preventing dangerous freeze-up conditions (KVP).

Sight Glass
A sight glass is intalled in the liquid line. The sight glass will show bubbles if the system is low on refrigerant.

Solenoid valve delay timer (KT1)
Delays the opening of the liquid valve by 18 min. at every start up of the ice maker.

Gear motor delay timer (KT2)
Delays gear motor STOP by 18 min. at every trip OFF of the ice maker.

3 - phases monitoring relay (F1)
On the power in of the machine check and assure correct Wiring - rotation of the gear motor.

Drive Motor Current Relay - Gavazzi DIB71 (KA1)
It senses the intensity at the drive motor, should this exceed its Amps setting point as per here below chart, tripping OFF the entire machine.

	MF 88 - MFN 88	
	400V	230V
HYS	6	6
LEVEL	80% - 1,6 Amps	50% - 2,5 Amps
DELAY	2 sec.	2 sec.

Dip switch (under cover):
400 V all in ON position
230 V dip Sw 1 in OFF position, 2 → 6 in ON position.

CONTROL CONSOLE

Located on the front panel is a virtual control console that monitors unit performance automatically. Any interruption or significant reduction in water or electrical supplies causes an instant stop to the operation of the modular flaker.
At the same time a warning light is activated on the control console telling the user of the ice makers stoppage and also the reason why.
Whenever any stoppage accured, its cause should be diagnosed and corrected the cause of the stoppage should be diagnosed and corrected also the reason why.

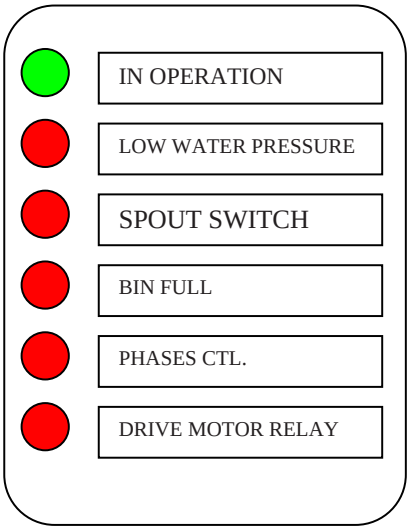

The Drive Motor Bonfiglioli mod. BN80A4 0.55 Kw Volts 230/400 Ph 3 Hz 50 Amps 2.65-1.53 RPM 1410 thermally protected. Provides power through speed reducer to turn auger.

The Gear Reducer
Hydromec mod. V196001 Lifetime synthetic oil lubrification, no maintenance is required.
Check gear reducer gaskets/oil seals at least every 2500 hours operation.
Ratio: 1/420
Outlet shaft speed: 3,33 rpm.

The gear reducer is securely bolted on the chassis base and supports the freezing cylinder as well. On its input shaft there is fitted the driving pulley. A separate output shaft with double keys is fitted in the gear box bore and connected to the auger shaft via aluminium casting coupling.

The Bin Thermostat Ranco K 22 - L 1075 - must have its sensing capillary extended into ice room in a way that it could be contacted by the ice when storage ice room becomes filled. It terminates ice production when its capillary gets in contact with ice. It is wired in series with all other controls. It is factory set to cut-out at 1,5 °C and cut-in at 4 °C.

The Expansion Valve is FLICA mod. AMVX 3 - Press 3 bar - Office 4.5 mm for R 404 A - meters the refrigerant to the evaporator serpentine at 1.7 bar (25 PSI). From s.n. 247 change to Honeywell TMXV 00110 - Orefice 4,75 MOP - 10°C

Drive Motor Contactor Telemecanique LC1K09 - with 4 N.O. contacts at 400V 9A with 230V 50-60 Hz coil.

The Evaporator: a vertical stainless steel tube, refrigerated, and water filled. In it there is a stainless steel auger and a water seal.

The Auger: a stainless steel triple spiral auger, it pushes the ice ribbon up to the top of the evaporator.

The Water Seal: a two part "face" seal, the top half rotating with the auger, the bottom half stationary, the sealing action being where the two seal "faces" meet.

The Breaker: where the ice is compressed and much of the extra water is squeezed out of it before it reaches the ice spout.

The Thrust Bearing (Top bearing): as the ice is, pushed up the evaporator, the auger is thrust down, and pressure from the auger thrust is taken up by this bearing.

SECTION IV

ADJUSTMENT AND REMOVAL AND REPLACEMENT PROCEDURES

The procedures provided in this Section are arranged in alphabetical order, to make specific Adjustment and Removal and replacement information easy to locate.
Read the instructions throughly before performing any Adjustment or Removal and Replacement Procedures.

1. ADJUSTMENT OF THE BIN THERMOSTAT CONTROL

The control for the Bin Thermostat is the Temperature Control, located in the Control Box Assembly.

WARNING - The adjusting screws on the Temperature Control device have very sensitive response to adjustment. Over-adjusting or erratic guessing, can foul the instrument and cause ultimate delay and part replacement, WHICH COULD HAVE BEEN PREVENTED.

Factory settings is +1,5 °C cut-out and +4 °C cut-in.

2. ADJUSTMENT OF THE WATER LEVEL INTO THE FREEZER CHAMBER

The correct Water Level in the Freezer Chamber is about 2 cm (3/4 inch) below the ice discharge opening. Low Water Level causes excessive strain inside the Freezer Assembly due to a faster freezing rate. When the Water Level is above or below the correct level adjustment can be performed to RAISE or LOWER the Water Level by raising or lowering the Water Reservoir and its Mounting Brackets.

A. To RAISE the Water Level: loosen and remove the two screws which attach the Mounting Bracket of the Water Reservoir to the frame and raise the Water Reservoir Assembly of the desired amount; then thread the screws in the corresponding holes and tighten.

B. To LOWER the water Level: loosen and remove the two screws which attach the Mounting Bracket of the Water Reservoir to the frame and lower the Water Reservoir Assembly of the desired amount; then thread the screws in the corresponding holes and tighten.

WARNING. - Be sure the electrical power supply and the water supply are OFF, before starting any of the following REMOVAL AND REPLACEMENT procedures, as a precaution to prevent possible personal injury or damage to equipment.

3. ADJUSTMENT OF THE EXPANSION VALVE

This valve may be manually regulated by means of the adjusting stem.
Turning the adjustment to the left counter-clockwise, will increase the rate of refrigerant flow. Turning the adjustment to the right (clockwise), the refrigerant flow to the evaporator is reduced. Use hex head wrench for manual adjusting operations.

NOTE.

A. These are general steps to be followed at first, when removing any part of any refrigeration system, which are in summary.

a) Store the refrigerant charge in compressor crankcase.

b) Remove all refrigerant from part to be opened.

c) Balance pressures in parts just evacuated.

d) Isolate parts to be opened from the rest of the system.

e) Clean and dry joints to be broken.

f) All refrigerant openings should be immediately plugged as soon as they are opened.

g) Upon reassembling, it is necessary to remove all the air moisture from the lines and whatever part that has been open to.

4. REMOVAL OF EXPANSION VALVE

A. To remove the expansion valve:

1. Remove screws and service panels.

2. Close service valves on liquid line.

3. Run the compressor for a moment until the evaporator coil has no liquid refrigerant in it.

4. With the compressor idling, equilize the pressure by cracking the liquid line service valve.

5. Turn the suction service valve stem all the way in.

6. Dry and clean the expansion valve accurately.

7. Remove the liquid line and unbolt the valve.

8. Seal refrigerant openings immediately.

B. To replace the expansion valve reverse the removal procedures.

5. REMOVAL AND REPLACEMENT OF THE AUGER, WATER SEAL, BEARINGS AND COUPLING

A. To Remove the Auger, Water Seal, Bearings, and Coupling:

1. Remove screws and the Front Panel and the Top Panel. Shut close water supply. Drain the water reservoir and freezer assy using the drain tube attached to the freezer water inlet.

2. Remove the screws that secure the spout to the stop of the Freezer Assembly.

3. Disconnect wires from micro box spout switch.

4. Remove micro-box and the spout assy.

5. Remove center plastic cap that protects top bearing.

6. Unloose and remove center bolt that secures the ice breaker to the auger.

7. Unloose and remove 8 screws that hold the ice breaker to freezer barrel.
(Two longer screws are used with freezer side bracket).

8. Insert two of these screws into two threaded-blind holes, which must have no bottom on barrel and by evenly drawing them down, ice breaker is lifted up.

9. Grasp the ice breaker and lift it up entirely. Worm shaft witt remain into the freezer worm tube.

10. With a rowhide mallet or a piece of wood placed on the bottom end of the top bearing, tap the bottom of the bearing to break it loose to be pulled out from ice breaker.

11. Clean away old grease and replace the "O" rings in the ice breaker.

12. Insert in auger hub threaded hole an eyebolt of 16 m/m in order to offer sufficient and positive hook for pulling-out the auger.

13. Lift and pull-out the auger with the help, eventually of a small hydraulic Hoist.

***NOTE**:*

1. Any time the Auger is removed for replacement, or, for the inspection and replacement of the Bearing or Coupling, use extra care in handling the Water Seal parts, so no dirt or foreign matter are deposited on the surfaces of the Seal.

2. If there is any doubt about the effectiveness of the Water Seal or O-Ring, REPLACE THEM. A dirty, worn or faulty Water Seal or O-Ring will cause a leak and ultimately require a second, time consuming, removal and replacement procedure to be performed, that COULD HAVE BEEN PREVENTED.

3. Lower bearing or water seal should be removed by pulling-out the bearing retainer from the bottom of freezer barrel.
You can heat the bearing retainer with a soft flame.
The bearing will drop out by itself.

14. Remove screws and lockwashers which attach the Freezer Assembly to the Adaptor on the Gear box.

15. Raise the Freezer Assembly off of the Adaptor, to gain access to the Bearing Retainer; then, temporarily secure the Freezer Assembly out of the way to allow room to work.

16. Unloose and remove the four screws that secure the bottom flange to the worm tube.

17. Push out to remove the seal ring.

18. Remove the clip ring and the bearing from the bearing retainer.

19. Inspect the lower half of the Water Seal. If reusable, use care to protect it from dirt, etc. prior to replacement procedure.

20. Inspect the lower Bearing and, if the Bearing is dry replace it with a new one.

21. Inspect the O ring of lower bearing retainer - eventually replace it with a new one.

22. Reach through the Adaptor and remove the Coupling for inspection.

23. Check the Coupling for cracks, chipping and excessive wear.

B. To replace, the Auger, Water Seal, Bearings, and Coupling, reverse the removal procedure.

***NOTE**:*

1. When installing the Bearing, in the bearing retainer carefully tap a piece of wood positioned across the bearing, to evenly seat the Bearing in the retainer.

2. After assembling the ice breaker on the upper end of the Auger and BEFORE installing the Cap apply an ample coating of vary bond grease type Never Seez food grade H1 - certified -20°C +150°C Grease, P/N 263612 00, to the upper part of the Bearing, the Cap Screw and Washer. Then, install the Cap in place.

6 REMOVAL AND REPLACEMENT OF THE FREEZER ASSEMBLY

***NOTE**:*

1. The Cabinet may have to be removed from is permanents location, especially if located in a corner, in order to have access to the left side and rear of the Chassis.

2. In addition to shutting OFF electrical power and inlet water to the icemaker, be sure to disconnect the inlet water line BEFORE moving the icemaker from the permanent location.

3. Always install a replacement Drier, anytime the sealed refrigeration system is opened. Do not replace the Drier until all other repair or replacement has been completed.

A. To Remove the Freezer Assembly:

1. Remove screws and left and right side rear panels.

2. Refer to procedure IV-12 and remove the Spout Assembly, Ice Breaker and Auger.

3. Remove Corbin clamp and Tygon tube from the Freezer Assembly that connects to the Water Reservoir Assembly.

4. Perform operation at steps 2-3-4-5 at procedure IV-10.

5. Disconnect suction line joint from the freezer.

6. Unsolder the refrigerant inlet line at the freezer.

7. Remove screws that secure bracket of freezer to the left side of chassis.

8. Remove screws, lock washers and washers which attach the bottom of the Freezer Assembly to the Adaptor on the Gear box.

9. Lift the Freezer Assembly up and off of the Adaptor of Gear box.

***NOTE**: Throughly evacuate the System to remove moisture and non - condensables.*

B. To replace the Freezer Assembly, reverse the removal procedure.

7. REMOVAL AND REPLACEMENT OF THE WATER RESERVOIR ASSEMBLY

A. To remove the Water Reservoir Assembly:

1. Remove screws and the left Panel and the Top Panel. Close the Water Supply. Drain water reservoir and freezer assy. Using the drain tube attached to the freezer water inlet.

***NOTE**: Be prepared with container or rags, to catch water left in lines, when lines are disconnected in next steps, to prevent draining water on parts, components, electrical lines, etc.*

2. Disconnect the water inlet tube from the Water Reservoir Assembly.

3. Remove two corbin clamps and two tubes from the bottom of the water reservoir assy and damp all water in them by bending them down in a pail.

4. Unscrew and remove the screws that secure the water reservoir bracket.

5. Remove the Water Reservoir Assembly, from the mounting bracket.

B. To replace the Water Reservoir Assembly, reverse the removal procedure.

***NOTE**: Check that the installed replacement Water Reservoir Assembly float moves freely.*

8 REMOVAL AND REPLACEMENT OF THE DRIVE MOTOR

A. To remove the drive motor assembly:

1. Remove screws and front, and left side panels.

2. Disconnect wire leads to motor.

3. Remove four hex head bolts, lockwashers and washer which attach the motor to the gear reducer.

4. Remove the drive motor out of the gear reducer.

B. To replace the drive Motor reverse the removal procedure.

9. REMOVAL AND REPLACEMENT OF GEAR BOX

A. Remove screws and all service panels.

1. Remove four nuts and washers which hold the gear box adaptor to the evaporator assembly.

2. Unloose and remove screws securing upper evaporator bracket to left side chassis.

3. With a small hydraulic Hoist raise the evaporator assembly to facilitate removal of entire gear box.

4. Unloose and remove four nuts holding the gear box to unit base. The gear box is now loose and can be removed. Do not tilt to avoid oil spillage.

***NOTE**: Gear box is supplied with the drive motor already in place.*

B. To remount Gear Box assembly reverse the removal procedure taking care to position correctly the output shaft with its keys well in shape.

SECTION V

SERVICE DIAGNOSIS

The Service Diagnosis Sections is for use in aiding the servicemen in diagnosing a particular problem for pin-point the area in which the problems lies, thus an ever available reference for proper corrective action.

The following chart lists corrective actions for the causes of known symptoms of certain problems that can occur in the ice makingrefrigeration system.

1. ICE MAKING - REFRIGERATION SYSTEM

SYMPTON	POSSIBLE CAUSE	SUGGESTED CORRECTION
2nd Warning Light glows Lo-water pressure.	Intermittent water supply or too low water pressure.	Water shut-off valve closed. Check and clean water strainer
The unit does not make ice.	Drive coupling worn or splitted. Gear in gear box stripped. Water not entering freezer assy.	Unloose and pull-ont gear box and change coupling. Check and replace. Check water line from reservoir to freezer.
Green Light is off. Unit will not run	Loose electrical connection Inoperative master switch.	Check wiring. Replace switch
3rd Warning light glows	Ice inside the plastic spout Inoperative Spout Switch	Remove it and check reason why Replace it
4th Warning light glows	Ice in contact with the bin thermostat bulb Bin thermostat out of order Machine located in a very cold room temperature	Remove it and check reason why Replace it Move it to a warmer place (min. room temp. +10°C)
5th Warning light glows	Wrong connection of the three phase to the unit plug Short of one of the three phases	Reverse two of them Check for proper power supply
6th Warning light glows. Cut OFF at Drive Motor Current Relay	Auger rubbing in freezer barrell - Freezer barrell scored. Auger bearing seized. Gear box seized - No lubricant. Freeze up. Drive motor running on reverse.	Remove auger to check situation smooth freezer barrel and auger spiral with send paper or replace them. Replace bearing. Add lubricant or replace gear box. Melt ice in freezer and remove ice breaker and auger to check cause of freezer-up. Interchange connection wires.

SYMPTON	POSSIBLE CAUSE	SUGGESTED CORRECTION
Excessive noise.	Gear reducer loose on frame. Drive motor end-play or worn bearings. Water level in evaporator too low.	Tighten. Repair or replace. Set water level correctly
Water leaks.	Damaged water seal. Gravity feed line leaking. Water level in reservoir too high.	Replace seal. Check hose clamp. Adjust water level.
Making wet ice.	Surrounging air temperature above 40°C (100°F). Under-or over-charge of refrigerant. Closed TEV. Float ball full of water.	Correct or move unit to cooled location. Re-charge with proper amount. Adjust valve for correc refrigerant flow. Replace.
Low ice production.	Loss of refrigerant, under or overcharge of refrigerant. Low water level in the reservoir. Overcharge of oil in system.	Check and recharge with proper amount of refrigerant. Check float valve operation. Check at oil sight glass. Lower to 1/2 sight glass.
Gear box noise.	Low on lubricant.	Remove filling plug and add synthetic Oil.

SECTION VI

WIRING DIAGRAMS

This section is provided as an aid in understanding the electrical circuit of the MF/MFN 88.

The Wiring Diagrams in this Sections is:

Wiring diagram - MF/MFN 88 AS (400/50/3+N).

WARNING - When conducting a conti-nuity check of the MF/MFN 88:

1. Disconnect the main power source.

2. DO NOT use an incandescent lamp or jumper wire, conduct all tests with a voltohm-meter.

WIRING DIAGRAM MF/MFN 88

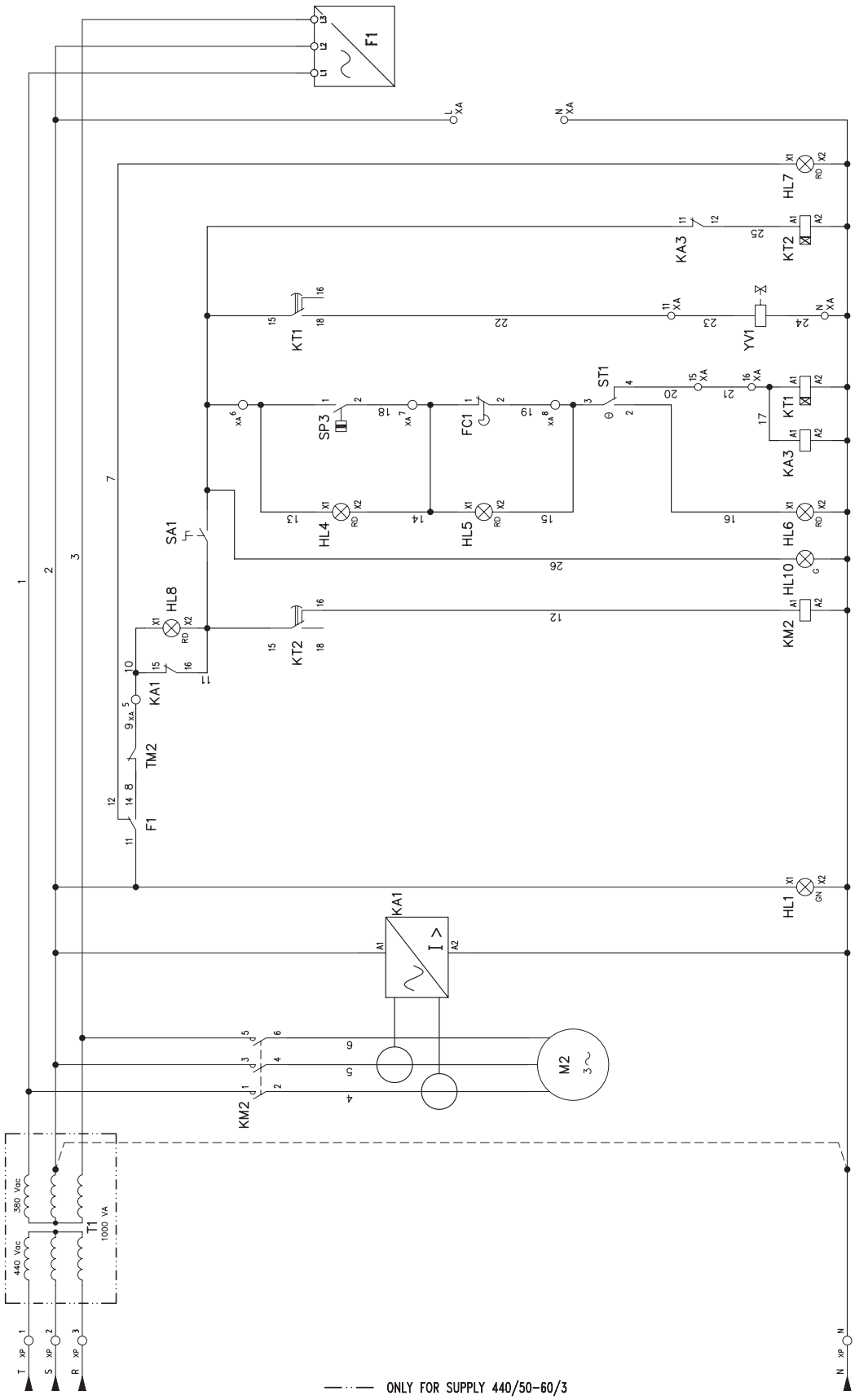

Sim.\Sym.	Sigla\Item	Funzione\Use Type
	F1	3-Phase monitoring relay
	FC1	Spout switch
	FU1	Fuse
	HL1	Power on
	HL4	Water alarm
	HL5	Spout switch light
	HL6	Bin Full
	HL7	Wrong phase alarm
	HL8	Current drive motor alarm
	HL10	Light master switch
	KA1	Current drive motor relay

Sim.\Sym.	Sigla\Item	Funzione\Use Type
	KA2	Ice level control relay
	KA3	Drive motor start relay
	KM2	Contactor Drive-Motor
	KT1	Timer-Delay Gas Valve open
	KT2	Time-delay Drive-motor
	M2	Drive Motor
	SA1	Master switch
	SP3	Water pressure control
	ST1	Thermostat
	YV1	Gas valve
	TM2	Drive motor thermal protector

Sim.\Sym.	Sigla\Item	Funzione\Use Type
	T1	Star three phase transformer

SECTION VII

MAINTENANCE & CLEANING INSTRUCTIONS

GENERAL

The periods and procedures for maintenance and cleaning are given as guides and are not to be construed as absolute or invariable. Cleaning especially will vary, depending upon local water conditions and the ice volume produced and, each icemaker must be maintained individually, in accordance with its own particular location requirements.

ICEMAKER

THE FOLLOWING MAINTENANCE SHOULD BE SCHEDULED AT LEAST TWO TIMES PER YEAR ON THIS ICEMAKER. CALL YOUR AUTHORIZED SCOTSMAN SERVICE AGENCY.

1. Check and clean optional water line strainers or water purification system.

2. Remove screws and top and front panel.

3. Remove cover from water reservoir and depress the float to ensure that a full stream of water enters each reservoir.

4. Check that the icemaker cabinet is level, in side-to-side and front-to-rear directions.

5. Check that the water level in water reservoir is below the overflow and is level to correspond 20 m/m below the ice discharge opening.

6. Clean water reservoir and interior of the freezer assembly, using a solution of SCOTSMAN Ice Machine Cleaner. Refer to CLEANING-Icemaker.

> ***NOTE**. Cleaning requirements vary according to local water conditions and individual user operation. Visual inspection of the auger before and after cleaning will indicate frequency and procedure to be followed in local areas.*

7. When doubtful about refrigerant charge, install refrigerant gauges on Service valves and check gauge. See Nameplate for refrigerant charge specifications at liquid line: will be 1.7 Bar (24 PSI).

8. Check drive motor operation:
Normal operating temperatures about 70° which is hot to touch. Check with Ammeter amps drawn and make sure they are in the limits of Drive motor windings.

9. Check setting and function of all the pressure controls also make sure that their corresponding light will glow.

10. Inspect the top bearing in the ice breaker, wipe clean of old grease and apply a coating of food grade grease, SCOTSMAN P/N 263612.00 or equivalent.

11. Check for refrigerant leaks.

12. Check for water leaks. Pour water down drain line to be sure that drain line is open and clear.

13. Check the quality of ice. Ice should be slightly wet when formed, but will cure rapidly to normal hardness in the bin.

14. Check the bin thermostat control bulb, hold ice on the control bulb of each system to test icemaker shut-off.

> ***NOTE**. The bin thermostat is factory se at 4°C differential and should keep the entire icemaker system shut off at least 10 minutes in high ambient temperatures, longer in low ambients temperature during normal operation. Settings are 1,5°C CUT-OUT and 4°C CUT-IN.*

15. Check gear box oil level through its sight glass every 6 months. Oil, on low speed section, must be replaced every 25.000 hrs. Use Syntetic Oil Shell Tivela SC320.

CLEANING

1. Remove screws and the top, left and front panel.

2. Disconnect unit from power supply.

3. Remove reservoir cover and block the float in water reservoir.

4. Drain the water reservoir and freezer assembly using the drain tube attached to the freezer water inlet. Return the drain tube to its normal upright position and replace the end cap.

> **WARNING - SCOTSMAN Ice Machine Cleaner contains Phosphoric and Hydroxyacetic acids. These compounds are corrosive and may cause burns. If swallowed, DO NOT induce vomiting. Give large amounts of water or milk. Call Physician immediately. In case of external contact flush with water. KEEP OUT OF THE REACH OF CHILDREN.**

5. Prepare cleaning solution: Mix 1 liter of SCOTSMAN Ice Machine Cleaner with 10 liters warm water.

6. Slowly pour the cleaning solution into water reservoir until it is full.

7. Plus IN again the unit and after 15 minutes, as the ice maker begins to use water from the reservoir, continue to add more cleaning solution to maintain full reservoir, if any has remained.

8. Continue icemaking, clearing ice from the spout, until the water reservoir is empty. DO NOT allow the icemaker to operate with empty reservoir.

9. Unplug again the unit.

10. Flush-out the remaining cleaning solution from freezer, as per step 4 Wash and rinse the water reservoir.

11. Remove the block from the float in the water reservoir and allow new fresh water to fill up the freezer. Plus IN again the unit.

12. Continue icemaking for at least 15 minutes, to eliminate any remanent of the cleaning solution. Check ice for acid taste - continue icemaking until ice tastes sweet.

CAUTION - DO NOT use ice produced from the cleaning solution. Be sure none remains in the bin.