SIMAG

SERVICE MANUAL

SP 125
SP 255
SPN 405
SPN 605
SPN 1205

R134A - R404A

Electronic Modular Flakers
and Superflakers

TABLE OF CONTENTS

Table of contents	page	1
Specifications SP 125		2
Specifications SP 255		4
Specifications SPN 405		6
Specifications SPN 605		8
Specifications SPN 1205		10
GENERAL INFORMATION AND INSTALLATION		
Introduction		12
Unpacking and Inspection - Ice maker		12
Unpacking and Inspection - Storage bin		12
Location and levelling		13
Electrical connections		14
Water supply and drain connections		14
Final check list		14
Installation practice		15
OPERATING INSTRUCTIONS		
Start up		16
Operational checks		18
PRINCIPLE OF OPERATION (How it works)		
Water circuit		21
Refrigerant circuit		22
Mechanical system		24
Operating pressures		25
Components description		26
ADJUSTMENT, REMOVAL AND REPLACEMENT PROCEDURES		
Adjustment of the evaporator water level		30
Replacement of evaporator temperature sensor		30
Replacement of condenser temperature sensor		30
Replacement of ice level light control		30
Replacement of P.C. Board		31
Replacement of the ice spout		31
Replacement of the auger, water seal, bearings and coupling		31
Replacement of the gear motor assy		32
Replacement of fan motor		32
Replacement of drier		33
Replacement of the freezing cylinder		33
Replacement of air cooled condenser		33
Replacement of water cooled condenser		34
Replacement of water regulating valve (water cooled models)		34
Replacement of compressor		34
Wiring diagram		35
Service diagnosis		39
MAINTENANCE AND CLEANING INSTRUCTIONS		
General		41
Icemaker		41
Cleaning instructions of water system		41

SPECIFICATIONS

ELECTRONIC MODULAR FLAKER MODEL SP 125

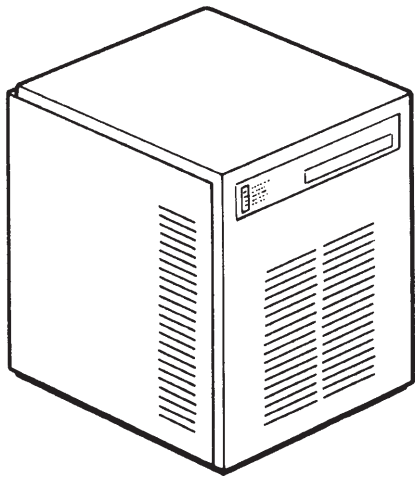

Important operating requirements:

	MIN	MAX
• Air temperature	10°C (50°F)	40°C (100°F)
• Water temperature	5°C (40°F)	35°C (90°F)
• Water pressure	1 bar (14 psi)	5 bars (70 psi)
• Electr. voltage variations from voltage rating specified on nameplate	-10%	+10%

ice making capacity

AIR COOLED MODELS

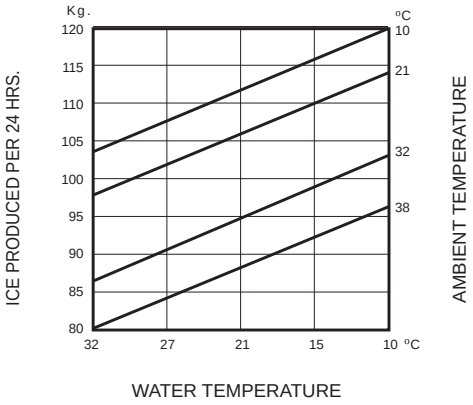

WATER COOLED MODELS

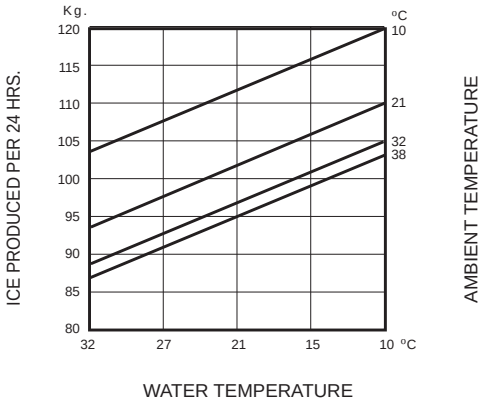

***NOTE**. The daily ice-making capacity is directly related to the condenser air inlet temperature, water temperature and age of the machine.*
*To keep your **S IMA G FLAKER** at peak performance levels, periodic maintenance checks must be carried out as indicated on page 41 of this manual.*

SPECIFICATIONS

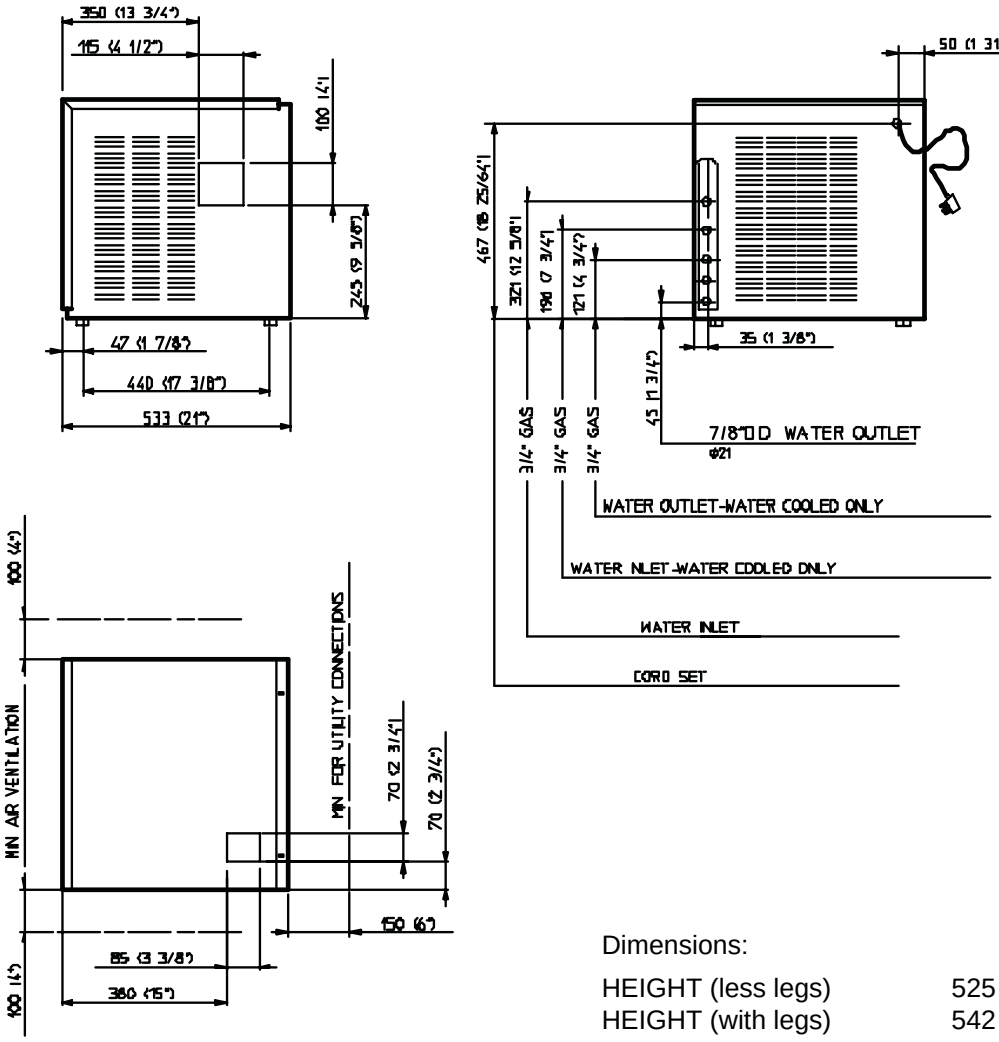

Dimensions:

HEIGHT (less legs)	525 mm.
HEIGHT (with legs)	542 mm.
WIDTH	560 mm.
DEPTH	533 mm.
WEIGHT	49 Kg.

SP 125 - MACHINE SPECIFICATIONS

Model	Cond. unit	Finish	Comp. HP	Water req. lt/24 HR
SP 125 AS SP 125 WS	Air Water	S. Steel	3/8	120 480*

Basic electr.	Amps	Start Amps	Watts	Electric power cons. Kwh per 24 HR	Nr. of wires	Amps fuse
230/50/1	3.2	17	500	11	3 x 1.5 mm^2	10

* A 15°C water temperature

SPECIFICATIONS

ELECTRONIC MODULAR FLAKER MODEL SP 255

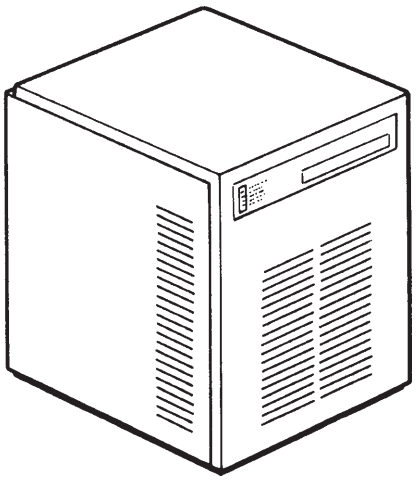

Important operating requirements:

	MIN	MAX
• Air temperature	10°C (50°F)	40°C (100°F)
• Water temperature	5°C (40°F)	35°C (90°F)
• Water pressure	1 bar (14 psi)	5 bars (70 psi)
• Electr. voltage variations from voltage rating specified on nameplate	-10%	+10%

ice making capacity

AIR COOLED MODELS

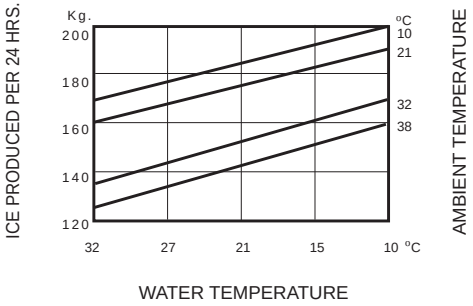

WATER COOLED MODELS

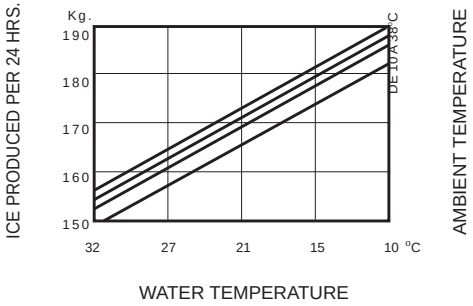

***NOTE**. The daily ice-making capacity is directly related to the condenser air inlet temperature, water temperature and age of the machine.*
*To keep your **S IMA G FLAKER** at peak performance levels, periodic maintenance checks must be carried out as indicated on page 41 of this manual.*

SPECIFICATIONS

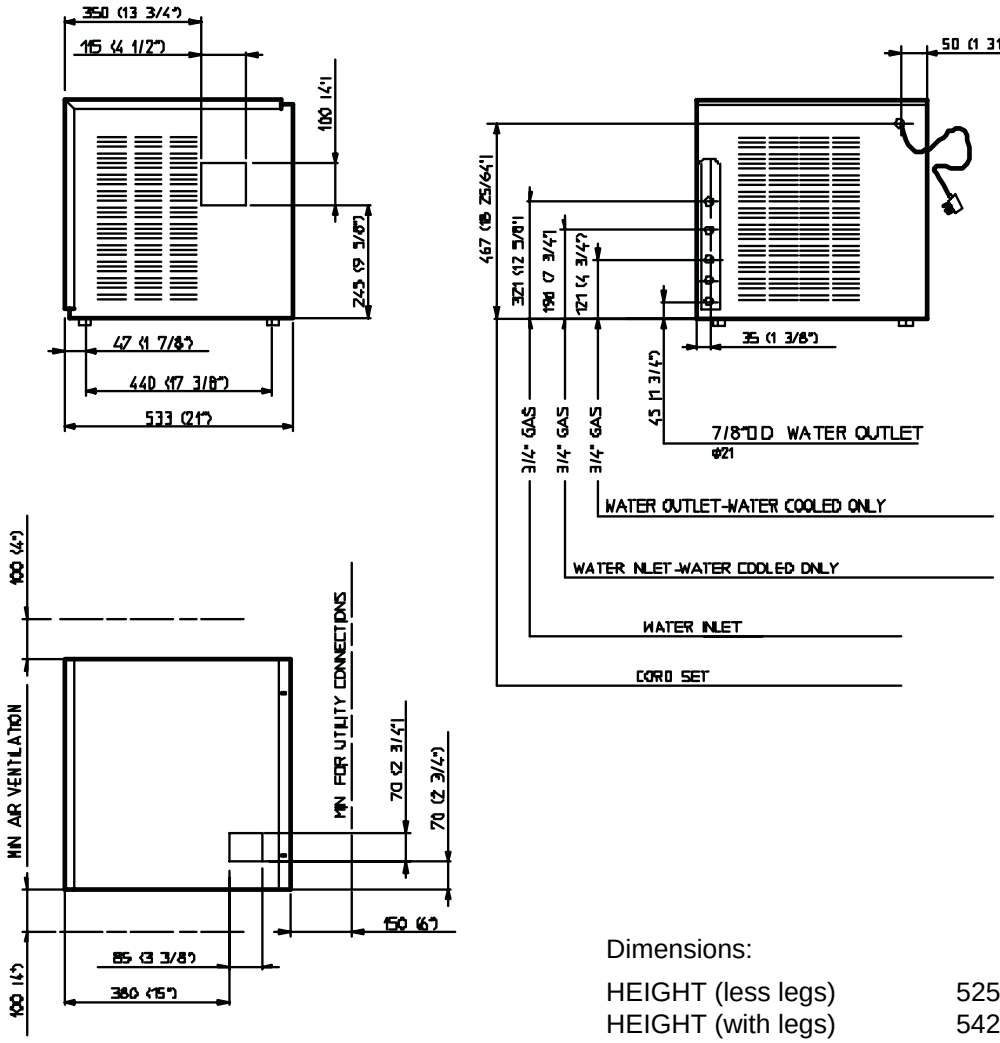

Dimensions:

HEIGHT (less legs)	525 mm.
HEIGHT (with legs)	542 mm.
WIDTH	533 mm.
DEPTH	533 mm.
WEIGHT	49 Kg.

SP 255 - MACHINE SPECIFICATIONS

Model	Cond. unit	Finish	Comp. HP	Water req. lt/24 HR
SP 255 AS SP 255 WS	Air Water	S. Steel	3/4	200 850*

Basic electr.	Amps	Start Amps	Watts	Electric power cons. Kwh per 24 HR	Nr. of wires	Amps fuse
230/50/1	4	20	760	17	3 x 1.5 mm^2	10

* A 15°C water temperature

SPECIFICATIONS

ELECTRONIC MODULAR SUPERFLAKER MODEL SPN 405

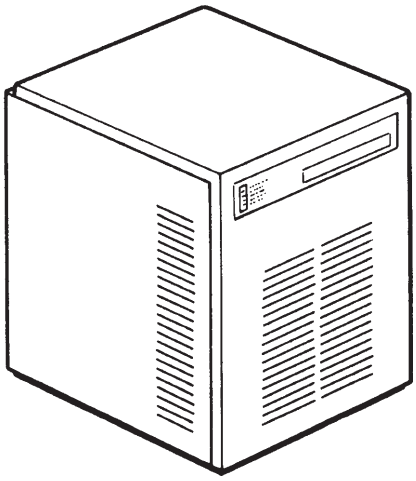

Important operating requirements:

	MIN	MAX
• Air temperature	10°C (50°F)	40°C (100°F)
• Water temperature	5°C (40°F)	35°C (90°F)
• Water pressure	1 bar (14 psi)	5 bars (70 psi)
• Electr. voltage variations from voltage rating specified on nameplate	-10%	+10%

ice making capacity

AIR COOLED MODELS

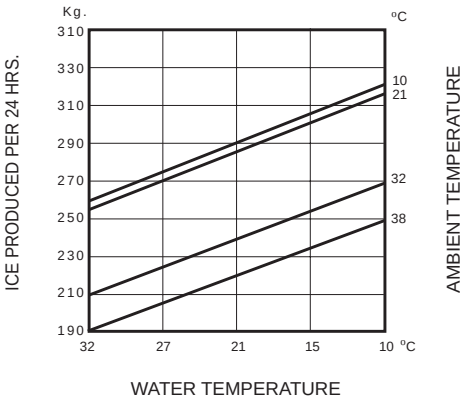

WATER COOLED MODELS

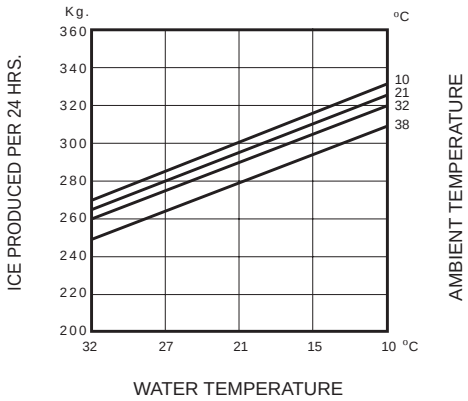

***NOTE**. The daily ice-making capacity is directly related to the condenser air inlet temperature, water temperature and age of the machine.*
*To keep your **SIMAG FLAKER** at peak performance levels, periodic maintenance checks must be carried out as indicated on page 41 of this manual.*

SPECIFICATIONS

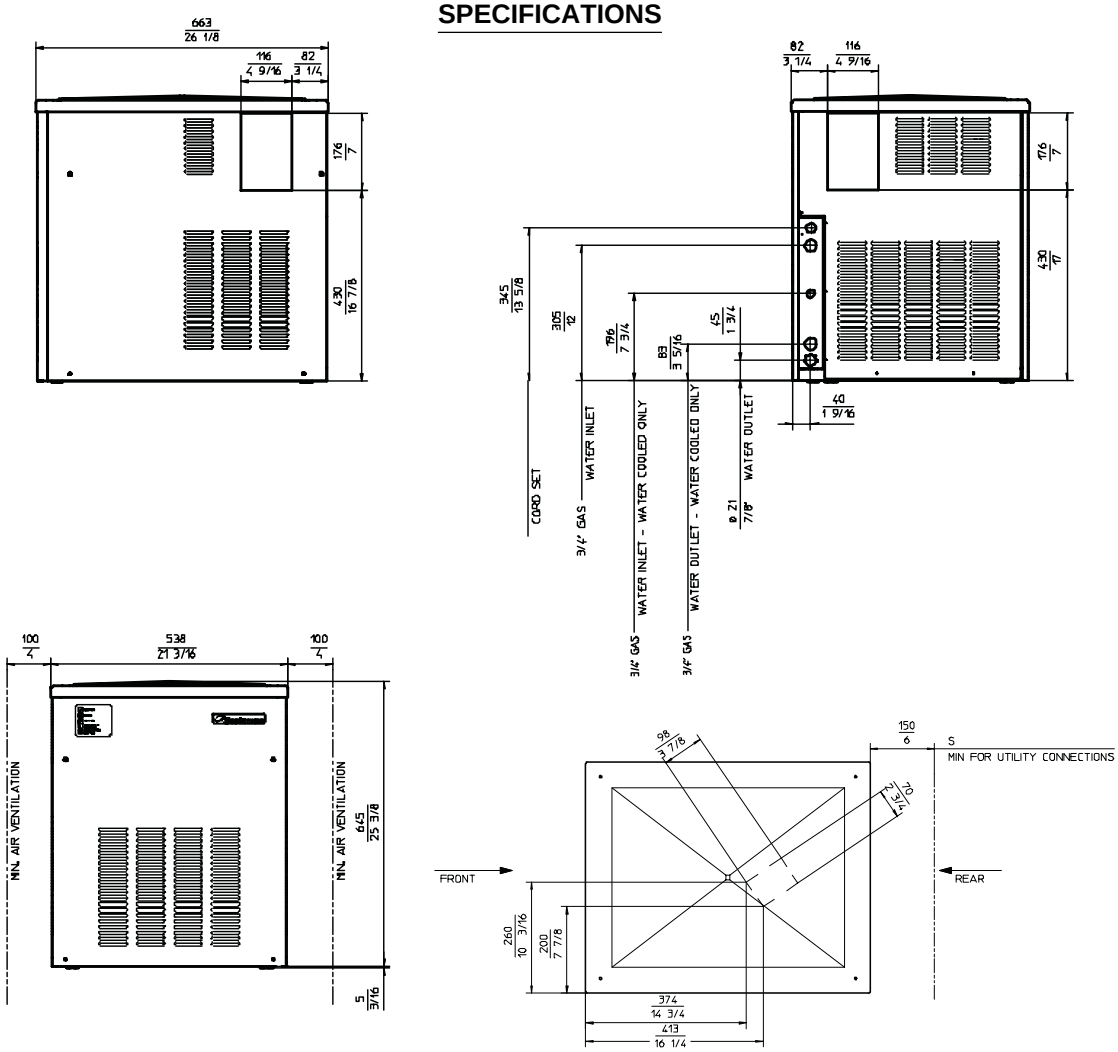

Dimensions:

HEIGHT (less legs)	645 mm.
HEIGHT (with legs)	650 mm.
WIDTH	538 mm.
DEPTH	663 mm.
WEIGHT	77 Kg.

SPN 405 - MACHINE SPECIFICATIONS

Model	Cond. unit	Finish	Comp. HP	Water req. lt/24 HR
SPN 405 AS SPN 405 WS	Air Water	S. Steel	1	320 1800*

Basic electr.	Amps	Start Amps	Watts	Electric power cons. Kwh per 24 HR	Nr. of wires	Amps fuse
230/50/1	5.2	29	1200	26	3 x 1.5 mm^2	16

* A 15°C water temperature

SPECIFICATIONS

ELECTRONIC MODULAR SUPERFLAKER MODEL SPN 605

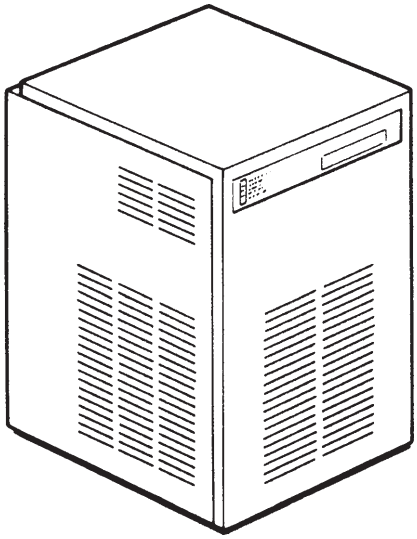

Important operating requirements:

	MIN	MAX
• Air temperature	10°C (50°F)	40°C (100°F)
• Water temperature	5°C (40°F)	35°C (90°F)
• Water pressure	1 bar (14 psi)	5 bars (70 psi)
• Electr. voltage variations from voltage rating specified on nameplate	-10%	+10%

ice making capacity

AIR COOLED MODELS

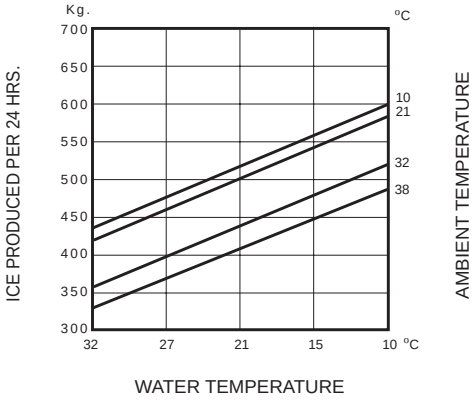

WATER COOLED MODELS

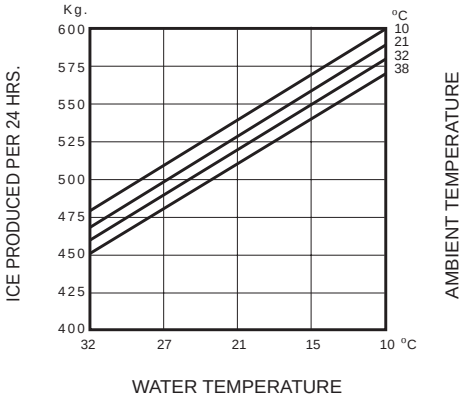

***NOTE**. The daily ice-making capacity is directly related to the condenser air inlet temperature, water temperature and age of the machine.*
*To keep your **S IMA G FLAKER** at peak performance levels, periodic maintenance checks must be carried out as indicated on page 41 of this manual.*

SPECIFICATIONS

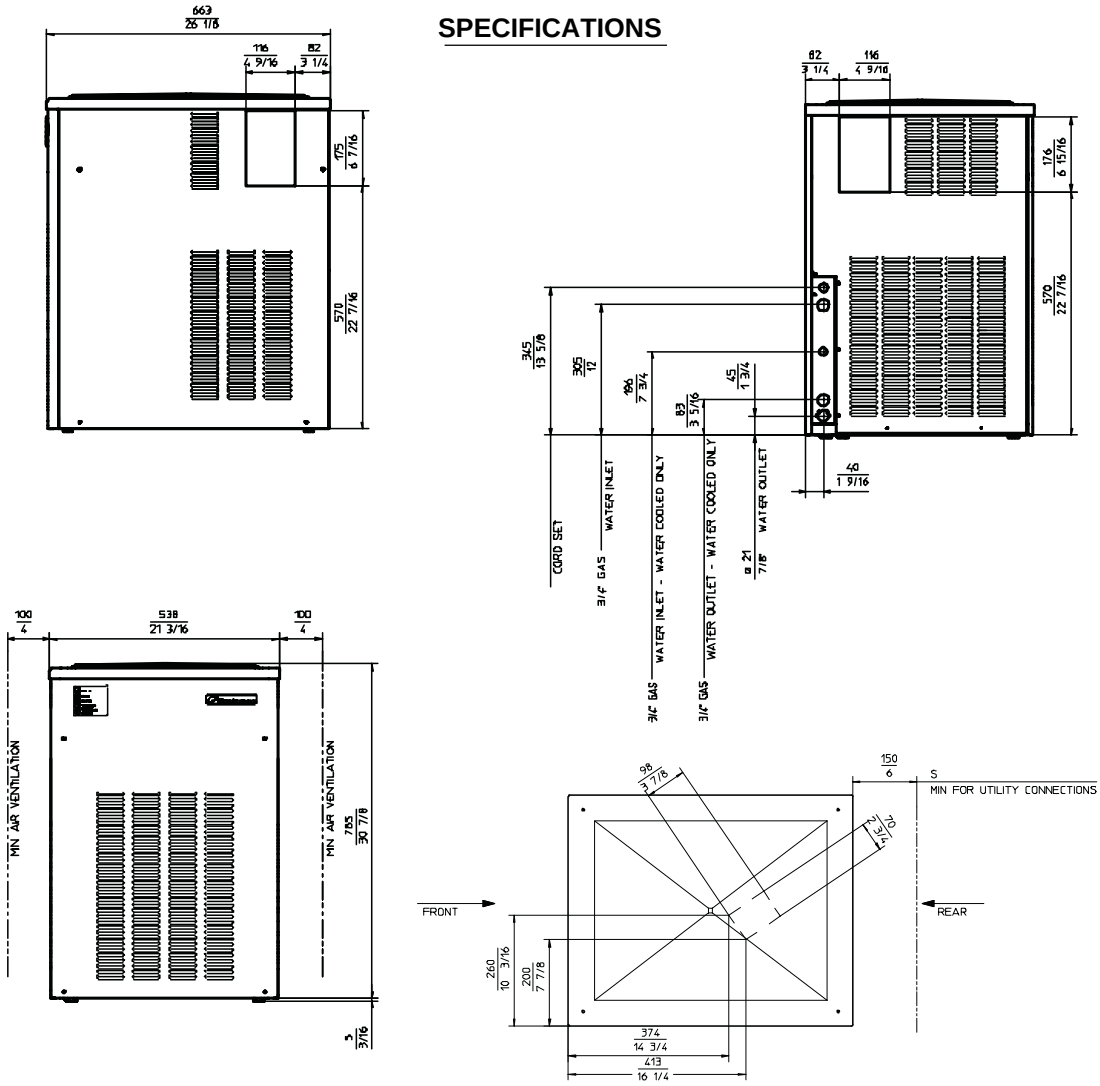

Dimensions:

HEIGHT (less legs)	785 mm.
HEIGHT (with legs)	790 mm.
WIDTH	538 mm.
DEPTH	663 mm.
WEIGHT	93 Kg.

SPN 605 - MACHINE SPECIFICATIONS

Model	Cond. unit	Finish	Comp. HP	Water req. lt/24 HR
SPN 605 AS SPN 605 WS	Air Water	S. Steel	1.5	600 3000*

Basic electr.	Amps	Start Amps	Watts	Electric power cons. Kwh per 24 HR	Nr. of wires	Amps fuse
230/50/1 400/50/3+N	10 4	34 22	2000	45 40	3 x 1.5 mm² 5 x 1.5 mm²	16 16

* A 15°C water temperature

SPECIFICATIONS

ELECTRONIC MODULAR SUPERFLAKER MODEL SPN 1205

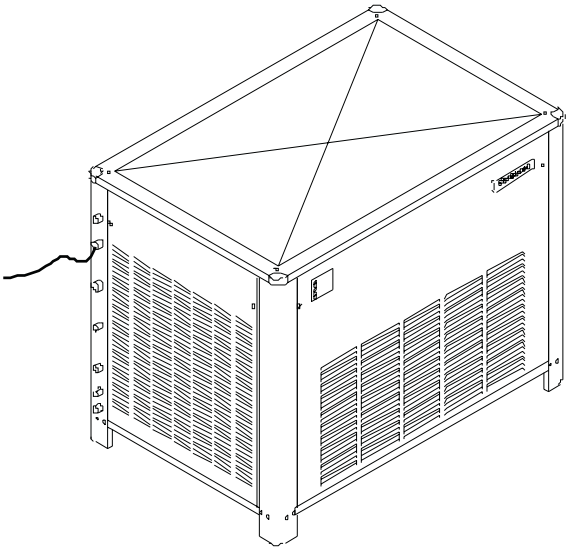

Important operating requirements:

	MIN	MAX
• Air temperature	10°C (50°F)	40°C (100°F)
• Water temperature	5°C (40°F)	35°C (90°F)
• Water pressure	1 bar (14 psi)	5 bars (70 psi)
• Electr. voltage variations from voltage rating specified on nameplate	-10%	+10%

ice making capacity

AIR COOLED MODEL

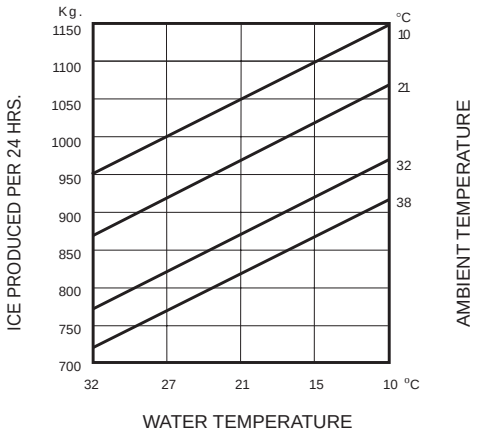

WATER COOLED MODELS

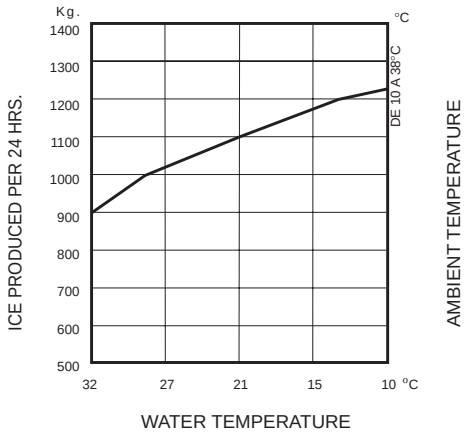

***NOTE**. The daily ice-making capacity is directly related to the condenser air inlet temperature, water temperature and age of the machine.*
*To keep your **S IMA G FLAKER**at peak performance levels, periodic maintenance checks must be carried out as indicated on page 41 of this manual.*

SPECIFICATIONS

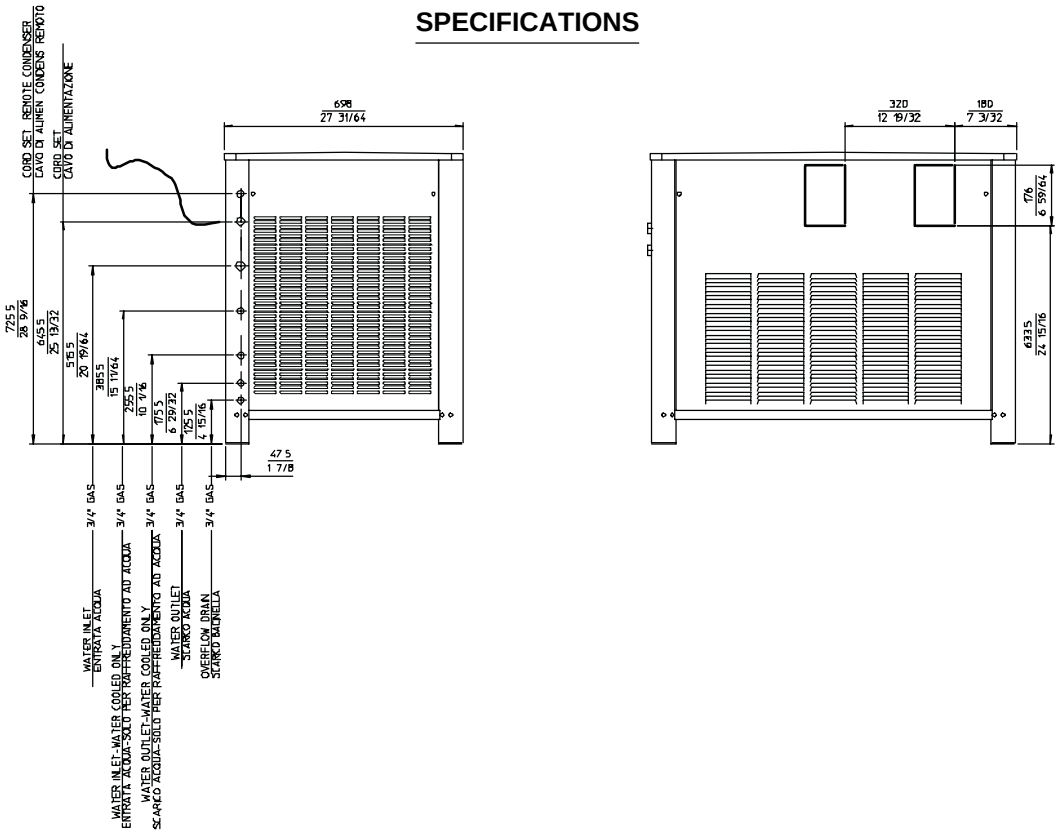

Dimensions:

HEIGHT	850 mm.
WIDTH	1065 mm.
DEPTH	698 mm.
WEIGHT	179 Kg.

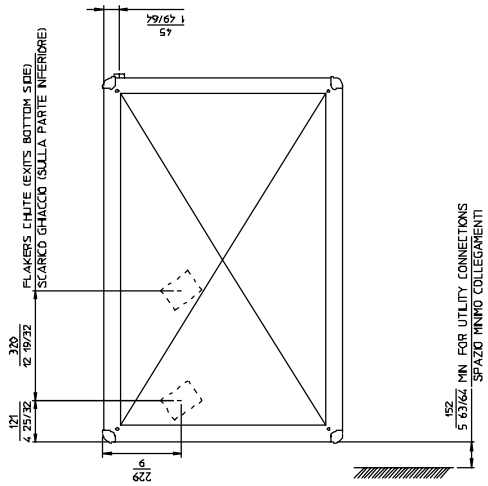

SPN 1205 - MACHINE SPECIFICATIONS

Model	Cond. unit	Finish	Comp. HP	Water req. lt/24 HR
SPN 1205 AS SPN 1205 WS	Air Water	S. Steel	2.5	1150 8000*

Basic electr.	Amps	Start Amps	Watts	Electric power cons. Kwh per 24 HR	Nr. of wires	Amps fuse
230/50/3 400/50/3 + N	7,1 3,4	56 28	3600	80	4 x 2.5 mm2 5 x 2.5 mm2	25 16

* A 15°C water temperature

GENERAL INFORMATION AND INSTALLATION

A. INTRODUCTION

This manual provides the specifications and the step-by-step procedures for the installation, start-up and operation, maintenance and cleaning for the **SIMAG SP 125, SP 255, SPN 405, SPN 605 and SPN 1205** Modular Icemakers. The Electronic Flakers and Superflakers are quality designed, engineered and manufactured. Their ice making systems are thoroughly tested providing the utmost in flexibility to fit the needs of a particular user.

***NOTE**. To retain the safety and performance built into this icemaker, it is important that installation and maintenance be conducted in the manner outlined in this manual.*

Storage Bin

Since the SP series Modular Flakers do not have their own attached ice storage bins, it is necessary to use an auxiliary bin as detailed herebelow:

R 85 in combination with **SP 125 and SP 255**

R 155 with its companion **RP 155** Top Cover in combination with **SP 125, SP 255, SPN 405 and SPN 605**

R 250 with its companion **RP 250** Top Cover in combination with **SPN 405 and SPN 605**

B. UNPACKING AND INSPECTION

Icemaker

1. Call your authorized SIMAG Distributor or Dealer for proper installation.

2. Visually inspect the exterior of the packing and skid. Any severe damage noted should be reported to the delivering carrier and a concealed damage claim form filled in subjet to inspection of the contents with the carrier's representative present.

3. a) Cut and remove the plastic strip securing the carton box to the skid.

b) Cut open the top of the carton and remove the polystyre protection sheet.

c) Pull out the polystyre posts from the corners and then remove the carton.

4. On models SP 125, SP 255, SPN 405- 605 remove the front/top panel while on model SPN 1205 remove top and sides panels of the unit and inspect for any concealed damage. Notify carrier of your claim for the concealed damage as stated in step 2 above.

5. Remove all internal support packing and masking tape.

6. Check that refrigerant lines do not rub against or touch other lines or surfaces, and that the fan blades move freely.

7. Check that the compressor fits snugly onto all its mounting pads.

8. See data plate on the rear side of the unit and check that local main voltage corresponds with the voltage specified on it.

CAUTION. Incorrect voltage supplied to the icemaker will void your parts replacement program.

9. Remove the manufacturer's registration card from the inside of the User Manual and fill-in all parts including: Model and Serial Number taken from the data plate.
Forward the completed self-addressed registration card to SIMAG.

Storage bin (R 85 - R 155 - R 250)

1. Follow the steps 1, 2 and 3 above to unpack the storage bin.

2. Unloose the two bolts and remove the protection plate from the drain fitting on model R 250.

3. Carefully lay it down on its rear side and fit the four legs into their sockets.

4. Remove all internal support packing and masking tape as well as the plastic ice cube deflector which is not used with the SIMAG Modular Flakers.

5. Remove the manufacturer's registration card from the inside of the User Manual and fill-in all parts including: Model and Serial Number taken from the data plate.
Forward the completed self-addressed registration card to SIMAG.

RP 250/155 Top Cover

1. Follow the steps 1 and 2 above to unpack the storage bin.

2. a) Cut and remove the plastic strip securing the carton box to the skid.

b) Cut the carton box and pull out the RP 250/155 Top Cover.

C. LOCATION AND LEVELLING

WARNING. This Modular Flaker and Superflaker is designed for indoor installation only. Extended periods of operation at temperature exceeding the following limitations will constitute misuse under the terms of the SIMAG Manufacturer's Limited Warranty resulting in LOSS of warranty coverage.

1. Position the storage bin in the selected permanent location.
Criteria for selection of location include:

a) Minimum room temperature 10°C (50°F) and maximum room temperature 40°C (100°F).

b) Water inlet temperatures: minimum 5°C (40°F) and maximum 35°C (90°F).

c) Well ventilated location for air cooled models (clean the air cooled condenser at frequent intervals).

d) Service access: adequate space must be left for all service connections through the rear of the ice maker. A minimum clearance of 15 cm (6") must be left at the sides of the unit for routing cooling air drawn into and exhausted out of the compartment to maintain proper condensing operation of air cooled models.

2. Level the Storage Bin Assy in both the left to right and front to rear directions by means of the adjustable legs.

3. On **R 155 and R 250 Storage Bin** inspect its top mounting gasket which should be flat with no wrinkles, to provide a good sealing when the RP 155/250 Top Cover is installed on top of it.

4. Place the RP 250/155 Top Cover on top of Storage bin using care not to wrinkle or tear the gasket.

6. Lay out on the bin top the plan of the ice machine as it will be located on the bin and cut an opening in the bin top for the ice drop area; cover the edges of the opening with vinyl tape.

7. Install the gasket-on the bin top-around ice drop opening of the bin top; apply sealant along the inside of the gasket.

8. Position and install the four aluminium front to rear stiffeners (U shaped) paying attention to the guideline shown on the drawing.

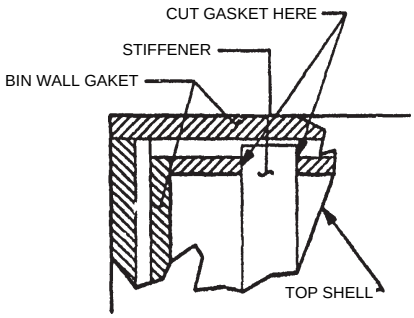

***NOTE**. Bin wall gasket must be cut to clear the stiffener ends as shown on drawing. Do not put any stiffeners crossing the ice drop opening.*

9. Install the bin top in its position onto the bin top by:
- place the rear side of top against rear edge of the bin
- lower the front of the top onto the stiffeners
- re-fit the screws previously removed as per step 5

10. Install the Modular Flaker or Superflaker onto the Top Cover of storage bin pay attention to match the ice chute with the Bin Top opening.

1. Open all the way the lift door in the upright position then place the door catch on the front face of the ice maker and tape it in place.

2. Drill two 3 mm holes in correspondance of the catch mounting holes.

3. Remove the tape and fasten the catch using the two self-tapping screws supplied.

D. ELECTRICAL CONNECTIONS

See data plate for current requirements to determine wire size to be used for electrical connections. All SIMAG icemakers require a solid earth wire.
All SIMAG ice machines are supplied from the factory completely pre-wired and require only electrical power connections to the wire cord provided at the rear of the unit.
Make sure that the ice machine is connected to its own circuit and individually fused (see data plate for fuse size).
The maximum allowable voltage variation should not exceed -10% and +10% of the data plate rating. Low voltage can cause faulty functioning and may be responsible for serious damage to the overload switch and motor windings.

***NOTE**. All external wiring should conform to national, state and local standards and regulations.*

Check voltage on the line and the ice maker's data plate before connecting the unit.

E. WATER SUPPLY AND DRAIN CONNECTIONS

GENERAL

When choosing the water supply for the ice flaker consideration should be given to:

a) Length of run

b) Water clarity and purity

c) Adequate water supply pressure

Since water is the most important single ingredient in producting ice you cannot emphasize too much the three items listed above.
Low water pressure, below 1 bar may cause malfunction of the ice maker unit.
Water containing excessive minerals will tend to produce scale build-up on the interior parts of the water system while too soft water (with too lo contents of mineral salts), will produce a very hard flaker ice.

WATER SUPPLY

Connect the 3/4" GAS male of the water inlet fitting, using the food grade flexible hose supplied to the cold water supply line with regular plumbing fitting and a shut-off valve installed in an accessible position between the water supply line and the unit.
If water contains a high level of impurities, it is advisable to consider the installation of an appropriate water filter or conditioner.

WATER SUPPLY - WATER COOLED MODELS

The water cooled versions of SIMAG Ice Makers require two separate inlet water supplies, one for the water making the flaker ice and the other for the water cooled condenser.
Connect the 3/4" GAS male fitting of the water inlet, using the flexible hose supplied to the cold water supply line with regular plumbing fitting and a shut-off valve installed in an accessible position between the water supply line and the unit.

WATER DRAIN

The recommended drain tube is a plastic or flexible hose with 18 mm (3/4") I.D. which runs to an open trapped and vented drain. When the drain is a long run, allow 3 cm pitch per meter (1/4" pitch per foot).
Install a vertical open vent on drain line high point at the unit drain connection to ensure good draining.
The ideal drain receptacle is a trapped and vented floor drain.

WATER DRAIN - WATER COOLED MODELS

Connect the 3/4" GAS male fitting of the condenser water drain, utilizing a second flexible hose to the open trapped and vented drain.
This additional drain line must not interconnect to any other of the units drains.

***NOTE**. The water supply and the water drain must be installed to conform with the local code. In some case a licensed plumber and/ or a plumbing permit is required.*

F. FINAL CHECK LIST

1. Is the unit in a room where ambient temperatures are within a minimum of 10°C (50°F) even in winter months?

2. Is there at least a 15 cm (6") clearance around the unit for proper air circulation?

3. Is the unit level? (IMPORTANT)

4. Have all the electrical and plumbing connections been made, and is the water supply shut-off valve open?

5. Has the voltage been tested and checked against the data plate rating?

6. Has the water supply pressure been checked to ensure a water pressure of at least 1 bar (14 psi).

7. Have the bolts holding the compressor down been checked to ensure that the compressor is snugly fitted onto the mounting pads?

8. Check all refrigerant lines and conduit lines to guard against vibrations and possible failure.

9. Have the bin liner and cabinet been wiped clean?

10. Has the owner/user been given the User Manual and been instructed on the importance of periodic maintenance checks?

11. Has the Manufacturer's registration card been filled in properly? Check for correct model and serial number against the serial plate and mail the registration card to the factory.

12. Has the owner been given the name and the phone number of the authorized SIMAG Service Agency serving him?

G. INSTALLATION PRACTICE

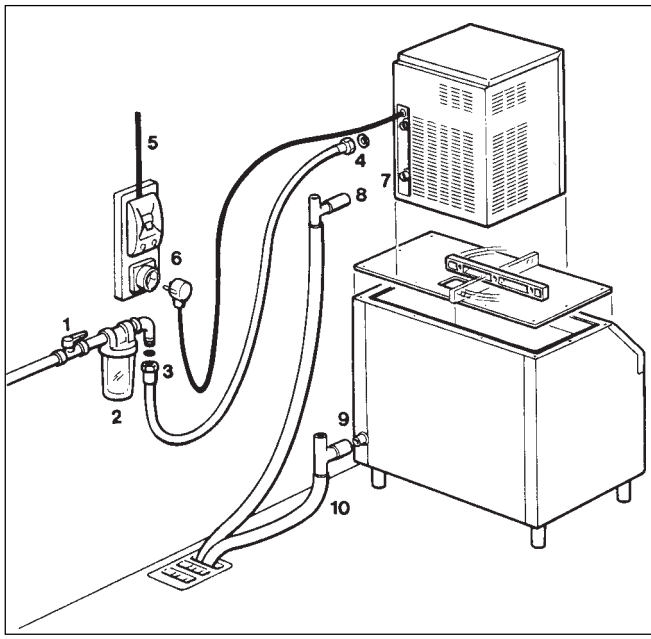

1. Hand shut-off valve
2. Water filter
3. Water supply line (flexible hose)
4. 3/4" GAS male fitting
5. Power line
6. Main switch
7. Drain fitting
8. Vented drain
9. Vented drain
10. Open trapped vented drain

WARNING. This icemaker is not designed for outdoor installation and will not function in ambient temperatures below 10°C (50°F) or above 40°C (100°F).
This icemaker will malfunction with water temperatures below 5°C (40°F) or above 35°C (90°F).

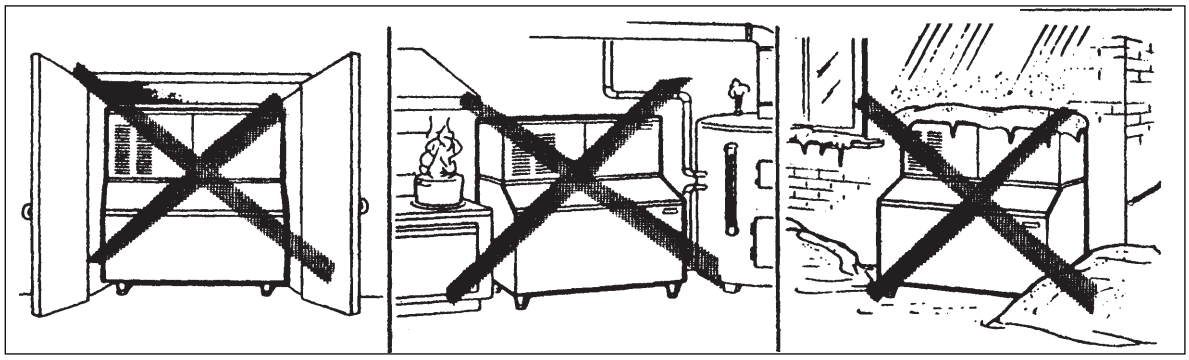

OPERATING INSTRUCTIONS

START UP

After having correctly installed the ice maker and completed the plumbing and electrical connections, perform the following "Start-up" procedure.

A. Open the water supply line shutoff valve and put the unit under electrical power by moving the main switch, on the power supply line, to the ON position.
The **first LED - GREEN -** will glow to signal that unit is under power.

> ***NOTE**. Every time the unit is put under power, after being kept for sometime in shut-off conditions (electrically disconnected) the **RED LED** will blink for 3 minutes after which the unit will start up with the immediate operation of the gear motor assembly and, after few seconds, of the compressor (Fig.1).*

B. Elapsed the 3 minutes - stand by period - the unit starts operating with the activation in sequence of the following assemblies:

GEAR MOTOR/S

COMPRESSOR

FAN MOTOR/S (if unit is an air cooled version) kept under control by the condenser temperature sensor which has its probe within the condenser fins (Fig.2).

C. After 2 or 3 minutes from the compressor start up, observe that flaker ice begins dropping off the ice spout to fall through the ice chute into the storage bin.

> ***NOTE**. The first ice bits that drop into the ice storage bin are not so hard as the evaporating temperature has not yet reached the correct operating value. It is necessary to allow the ice - just made - to cure itself and wait for about ten minutes for the evaporating temperature to reach the correct value so to make more hard bits of ice.*

FIG. 1

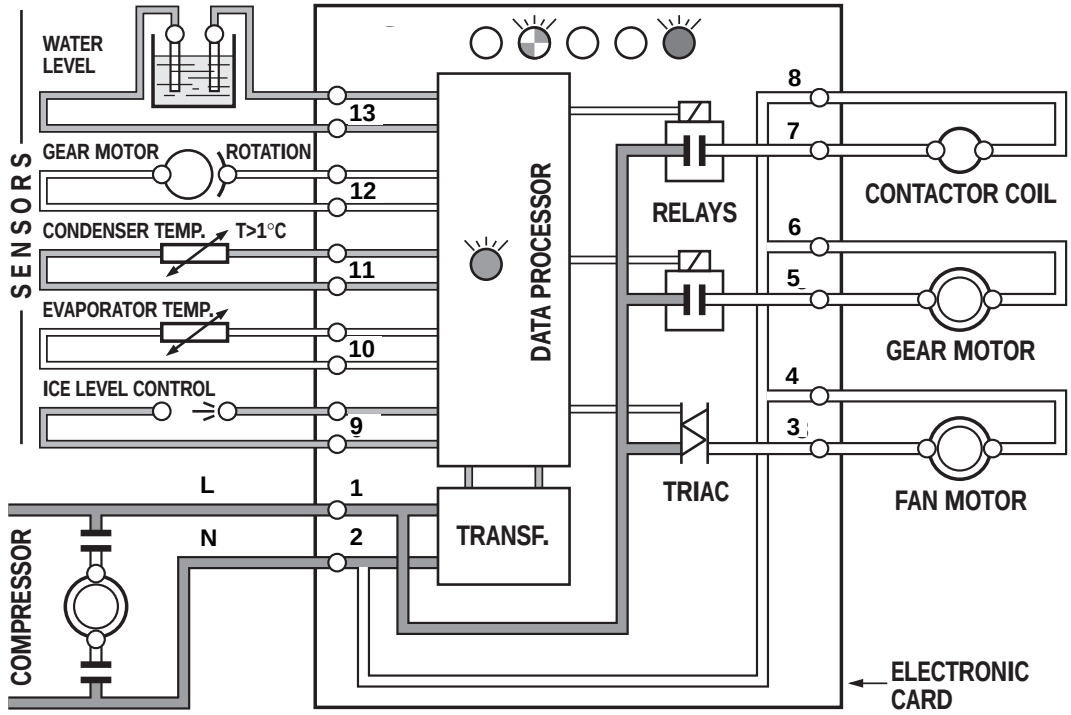

FIG. 2

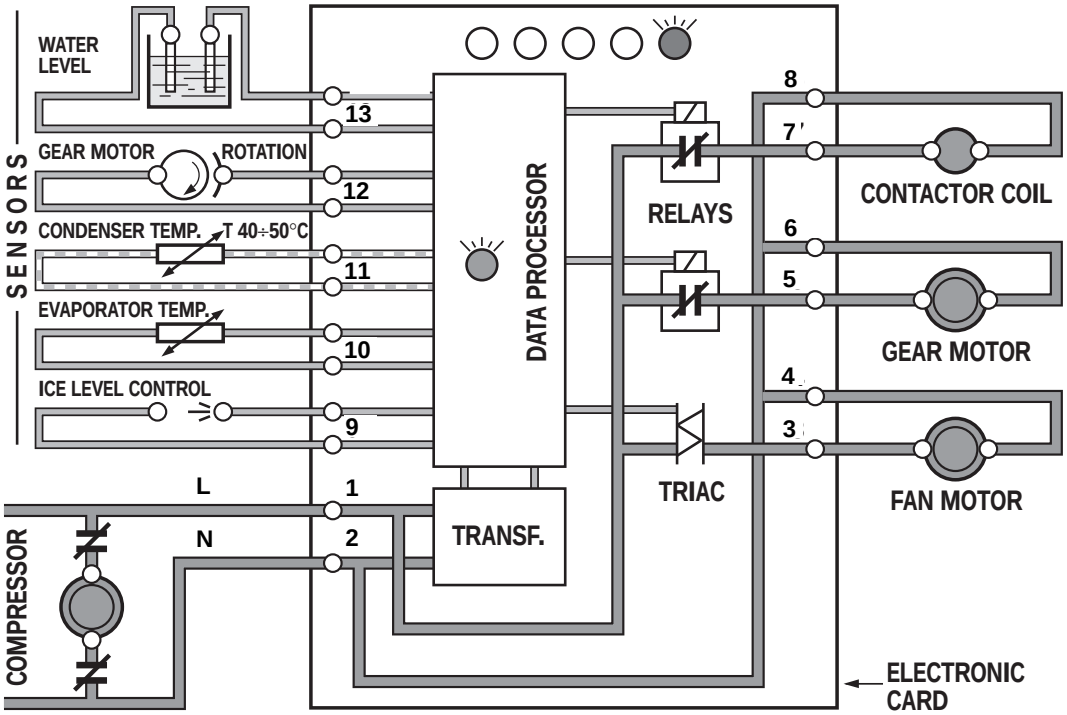
WATER LEVEL
GEAR MOTOR
ROTATION
CONDENSER TEMP.
T 40÷50°C
EVAPORATOR TEMP.
ICE LEVEL CONTROL
SENSORS
13
12
11
10
9
L
N
1
2
COMPRESSOR
DATA PROCESSOR
TRANSF.
RELAYS
TRIAC
8
7'
6
5
4
3
CONTACTOR COIL
GEAR MOTOR
FAN MOTOR
ELECTRONIC CARD

FIG. 3

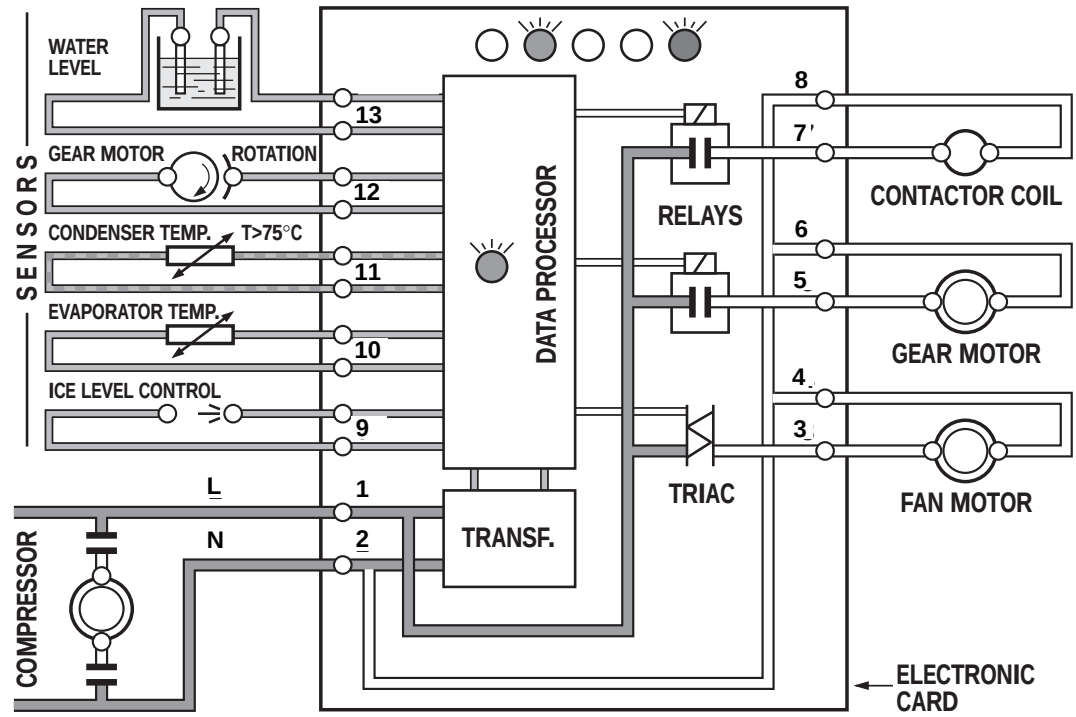
WATER LEVEL
GEAR MOTOR
ROTATION
CONDENSER TEMP.
T>75°C
EVAPORATOR TEMP.
ICE LEVEL CONTROL
SENSORS
13
12
11
10
9
L
N
1
2
COMPRESSOR
DATA PROCESSOR
TRANSF.
RELAYS
TRIAC
8
7'
6
5
4
3
CONTACTOR COIL
GEAR MOTOR
FAN MOTOR
ELECTRONIC CARD

***NOTE**. If, after ten minutes from the compressor start-up, the evaporating temperature has not dropped down to a value lower than **-1°C (30°F)** the evaporating temperature sensor detects such an abnormal situation and stops consequently the unit operation.*
*In this circustance, the **5th warning YELLOW LED** will blink.*

The machine will remain in OFF mode for one hour then it will restart automatically.
In case the unit trips OFF again in alarm for 3 times in 3 hours, the machine SHUTS OFF DEFINITIVELY.
*After having diagnosed and eliminated the cause of the too hi evaporating temperature (insufficient refrigerant in the system or compressor not running) it is necessary to unplug and plug in again to restart the machine. The unit, before resuming the normal operation, will go through the **usual 3 minutes STAND-BY period.***

***NOTE**. On air cooled models, the condenser temperature sensor, which is located within the condenser fins, keeps the head (condensing) pressure between preset values.*
*In the event of condenser clogged - such to prevent the proper flow of the cooling air - or, in case the fan motor is out of operation, the condenser temperature rises and when it reaches **70° C (160°F)** for air cooled version - and **60° C (140°F)** - for water cooled version - the condenser temperature sensor shuts-off the ice maker with the consequent light-up of the **RED WARNING LIGHT** (Fig.3).*

The machine will remain in OFF mode for one hour then it will restart automatically.
In case the unit trips OFF again in alarm for 3 times in 3 hours, the machine SHUTS OFF DEFINITIVELY.
After having diagnosed the reason of the temperature rise and removed its cause, it is necessary to proceed as per the previous "NOTE" to start up again the operation of the ice maker.

OPERATION CHECKS UPON THE UNIT START UP

D. Remove front service panel and, if necessary, install the refrigerant service gauges on the corresponding service valves to check both the HI and LO refrigerant pressures.

E. Check for the correct CUT-OUT and CUT-IN of the **water level sensor** by first shutting closed the water shutoff valve on the water supply line.

FIG. 4

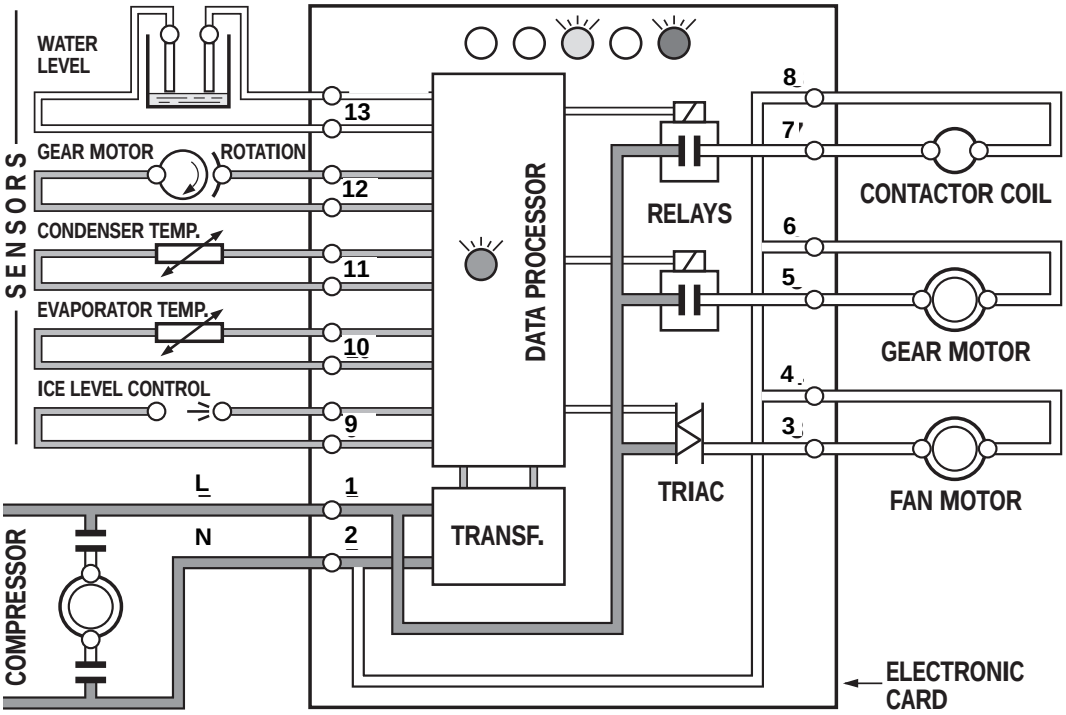

This will cause a gradual decrease of the water level in the float reservoir and as soon as the level gets below the two vertical metal pins, the flaker stops to operate and the **YELLOW warning LED** will glow to signal the shortage of water (Fig. 4)

***NOTE**. The water level sensor detects the presence of water in the float reservoir and confirms it to the micro processor by maintaining a low voltage current flow between the two metal pins using the water as conductor.*

WARNING. The use of de-mineralized water (water with no salt content) having an electrical conductivity lower than 30 µS, will cause break with the consequent CUT-OUT of the flaker and the glowing of the YELLOW LED of water shortage, even with water in the reservoir.

Opening the water supply line shutoff valve to fill up again the float reservoir, the **YELLOW LED** goes off while the **RED LED starts blinking**. After 3 minutes the unit resumes its total operation with the immediate start-up of the gear motor and, few seconds later, of the compressor.

F. Check for the correct operation of the electronic eye (one per each ice chute on model SP1205) of the optical ice level control, by closing the bottom opening of the vertical ice chute.
Wait the built up of the ice into the ice chute till it cuts the light beam of the sensing "eyes".
This interruption will cause an immediate blinking of the Bin Full **YELLOW LED** located on the front of the P.C. Board and after about 6 seconds causes the shutoff of the unit with the simultaneous lighting (steady) of the **Same LED** signalling the **full bin situation** (Fig.5).

Discharge the ice from the ice chute so to resume the light beam previously interrupted and after about 6 seconds the flaker will re-start - through the 3 minutes STAND-BY period - with the extinguishing of the YELLOW LED.

FIG. 5

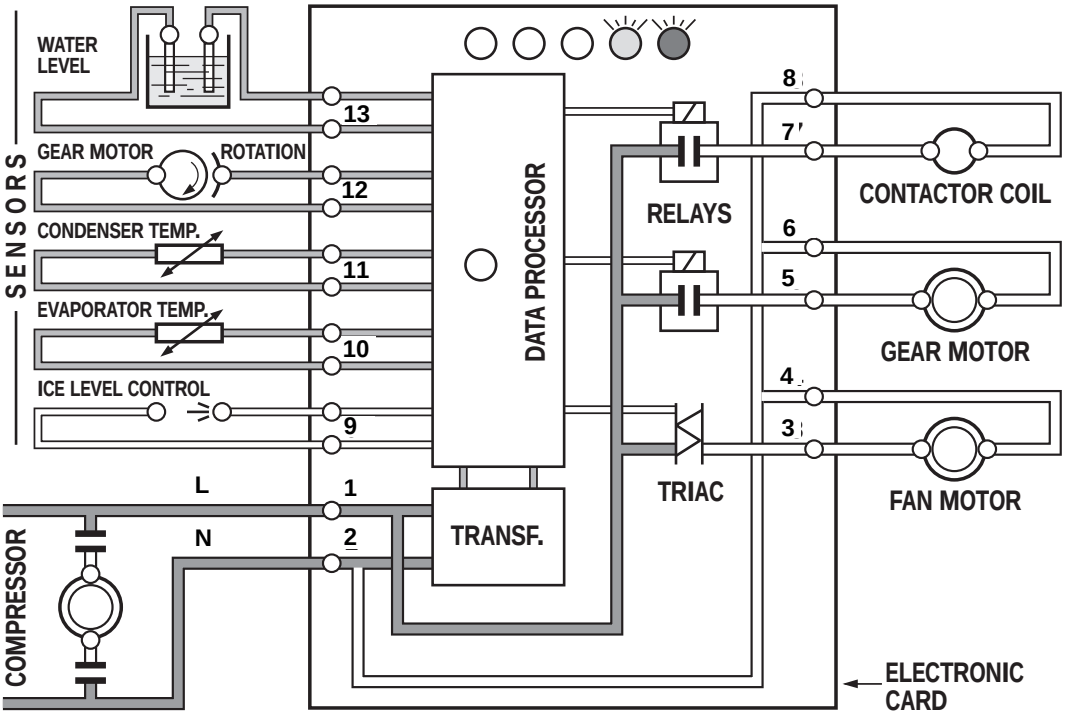

***NOTE**. The **ICE LEVEL CONTROL (INFRARED SYSTEM)** is independent of the temperature however, the reliability of its detection **can be affected by external light radiations** or by any sort of dirt and scale sediment which may deposit directly on the light source and on the receiver.*
To prevent any possible ice maker malfunction, it is advisable to locate the unit where it can't be reached by any direct light beam or light radiation and to follow the instructions for the periodical cleaning of the light sensor elements as detailed in the MAINTENANCE AND CLEANING PROCEDURES.

***NOTE.** In the front of the PC Board is located a small I/R Trimmer directly connected with the optical Ice level control. By means of its screw it is possible to modify the signal received from the Ice Level control so to overcame some problem caused by dirt and/ or low power supply.*
*When adjusted it is **very important** to check for its correct operation **using ice** (NOT HAND) to break the Infrared Beam. In case the machine doesn't stop it means that the new setting is too much powerfull and need to be reduced always by means of the I/R Trimmer.*

M. If previously installed, remove the refrigerant service gauges and re-fit the unit service panels previously removed.

N. Instruct the owner/user on the general operation of the ice machine and about the cleaning and care it requires.

PRINCIPLE OF OPERATION

WATER CIRCUIT

The water enter in the machine through the water inlet fitting which incorporates a strainer - located at the rear side of the cabinet - then it goes to the water reservoir flowing through a float valve.

***NOTE**. The presence of the water in the float reservoir is detected by a system of two sensors which operates in conjunction with the P.C. Board. The two sensors use the water as a conductor to maintain a low voltage current flow between them. In case the water used is very soft (de-mineralized) or the float reservoir gets empty the current flow between the sensors become so weak or is no longer maintained that, as consequence, the P.C. Board shutoff the flaker operation with the simultaneous glowing of the **YELLOW LED** signalling "Shortage of water".*

The float reservoir is positioned at the side of the freezing at such an height to be able to maintain a constant water level. The water flows from the reservoir into the bottom inlet of the freezer to sorround the stainless steel auger which is vertically fitted in the center of the freezer.
In the freezer the incoming water gets chilled into soft (slush) ice which is moved upward by the rotating action of the auger. The auger rotates counter-clockwise within the freezer powered by a direct drive gear motor and carries the ice upward along the refrigerated freezer inner walls and by doing so the ice gets progressively thicker and harder.
The ice, being costantly lifted up, meet the teeth of the ice breaker which is fitted on the top end of the auger, where it gets compacted, cracked and forced to change from vertical into horizontal motion to be discharged out, through the ice spout and chute, into the storage bin.

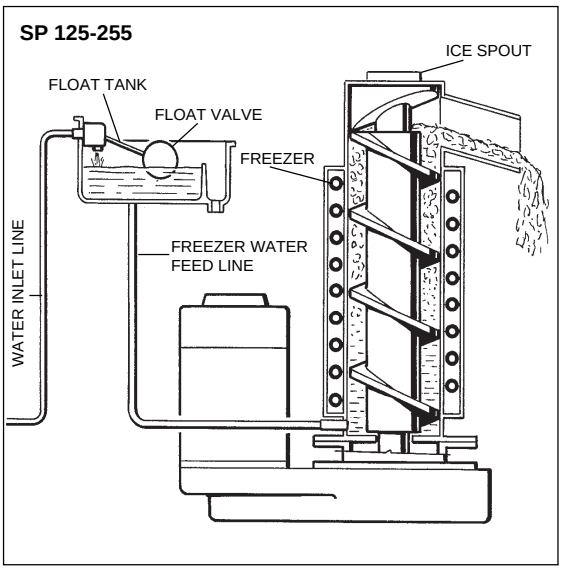

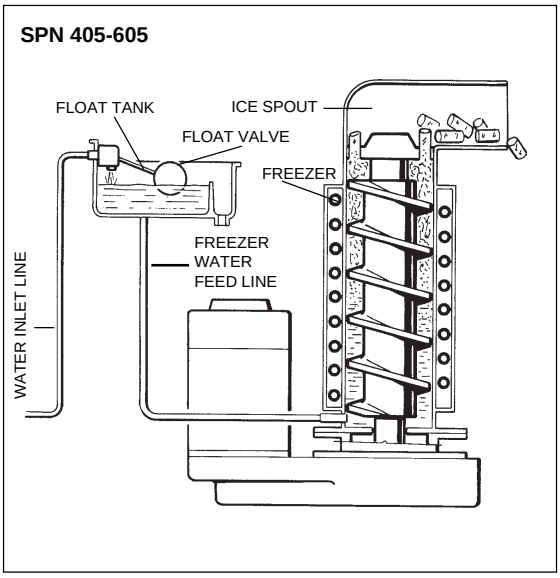

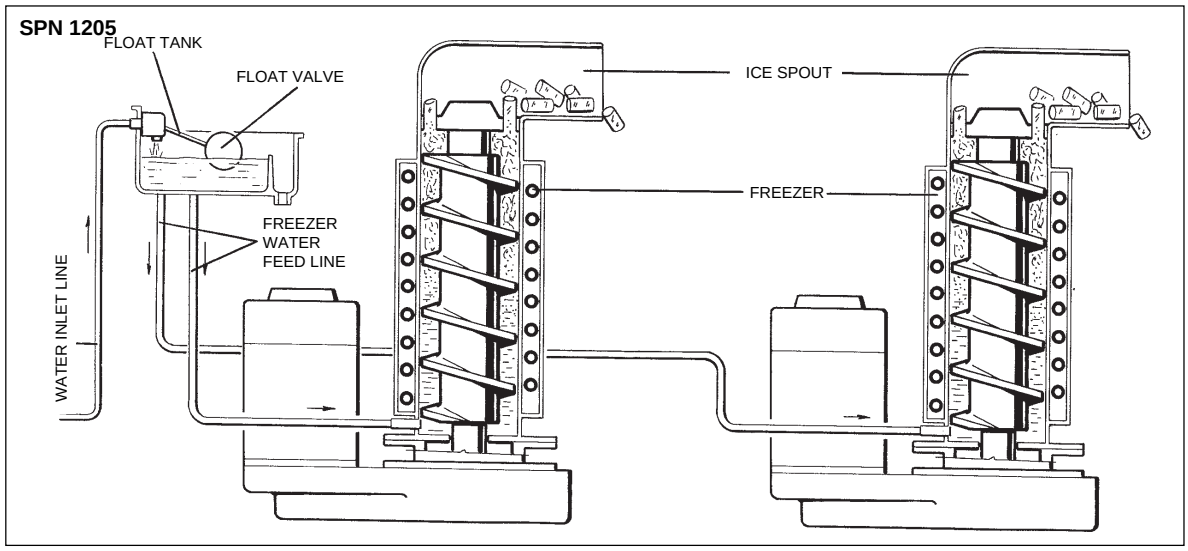

By running the ice maker, i.e. by putting the unit under power, starts the automatic and continuous icemaking process which would not stop until the ice storage bin gets filled-up to the level of the control "eyes" located on the ice chute. As the ice level raises to interrupt the light beam running between the two infrared leds (one or both on model SPN1205), the unit stops after six seconds, with the simulteneous glowing of the **YELLOW LED** signalling the **"Full Bin" situation.**

> ***NOTE**. The interruption of the light beam between the two light sensors is immediately signalled by the blinking of the **BIN FULL YELLOW LED** located on the front of the P.C. Board.*
> *After about **6" of steady interruption** of the light beam the unit stops and the **"Full Bin" YELLOW LED** glows steady.*
> *The six seconds of delay prevent the unit from stopping for any undue reason like the momentarily interruption of the light beam caused by the flakes that slides along the ice spout before dropping into the bin.*

As some ice gets scooped out from the storage bin, the light beam between the two sensors resumes and six seconds later the ice machine restarts the ice making process - going always through the 3' stand by - and the YELLOW LED goes off.

This condenser temperature sensor, when senses a rising of the condenser temperature beyond the pre-fixed limit, changes its electrical resistance and send a low voltage power flow to the MICRO-PROCESSOR of the P.C. Board which energizes, through a **TRIAC**, the **Fan Motor in ON-OFF mode.** On the water cooled versions, the refrigerant head pressure is kept at the constant value of **8.5 bar (120 psig)** on SP 125 and of **17 bar (240 psig)** on SP255, SPN405-605 and SPN 1205 by the metered amount of water passing through the condenser which is regulated by the action of the Water Regulating Valve that has its capillary

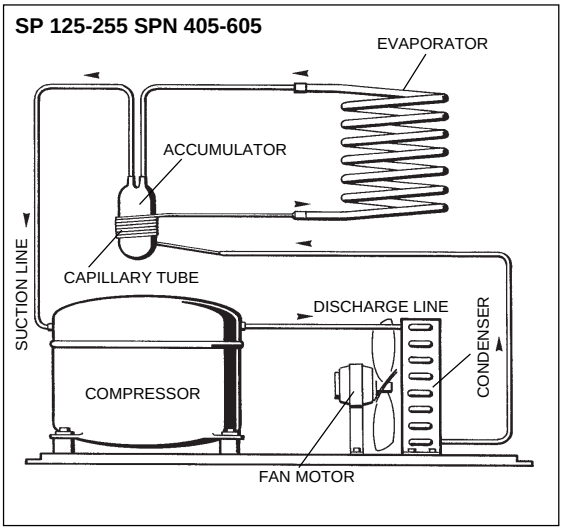

REFRIGERANT CIRCUIT

The hot gas refrigerant discharged out from the compressor reaches the condenser where, being cooled down, condenses into liquid.
Flowing into the liquid line it passes through the drier filter, then it goes all the way through the capillary tube where it looses some of its pressure so that its pressure and temperature are lowered.
Next, the refrigerant enters into the evaporator coil wrapped around the freezer inner tube.
The water being constantly fed at the interior of the freezer inner tube, exchange heat with the refrigerant circulating into the evaporator coil, this cause the refrigerant to boil-off and evaporate, thereby it changes from liquid into vapor.
The vapor refrigerant then passes through the suction accumulator and through the suction line where the refrigerant exchanges heat with the one flowing into the capillary tube (warmer) before being sucked into the compressor to be recirculated.
The refrigerant head pressure is kept between two pre-set values (**8÷9 bar - 110÷125 psig** on SP 125 and **17÷18 bar - 240÷250 psig** on SP 255, SPN405, SPN 650 and SPN1205) by the condenser temperature sensor which has its probe located within the condenser fins - in air cooled versions.

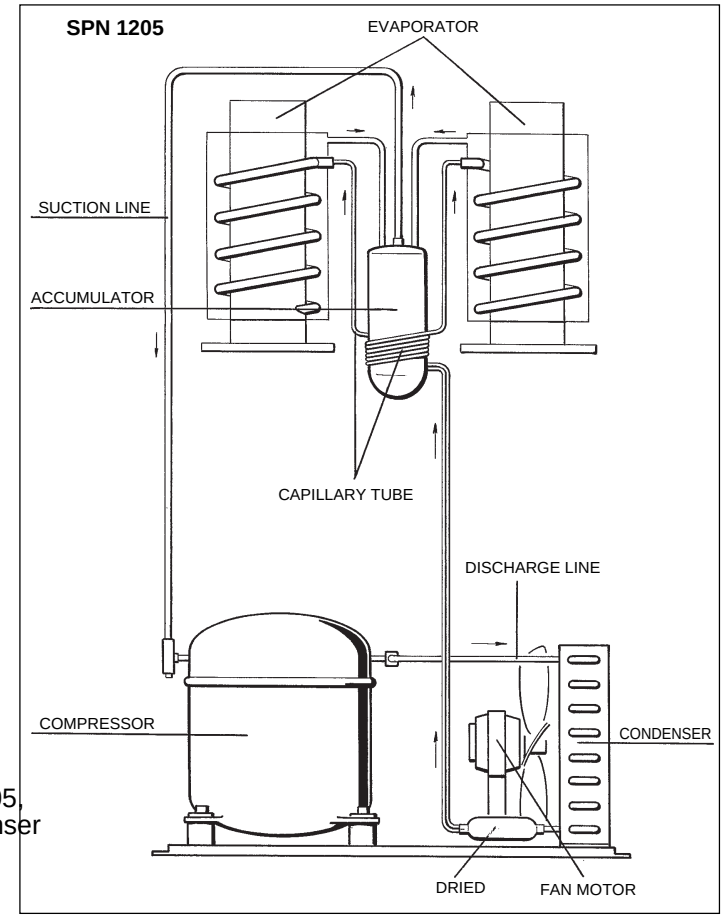

tube connected to the liquid refrigerant line. As pressure increases, the water regulating valve opens to increase the flow of cooling water to the condenser.

***NOTE**. In case the condenser temperature probe senses that the condenser temperature has rised to 70°C on air cooled version - or 60° C on water cooled version - for one of the following abnormal reasons:*

***CLOGGED CONDENSER** (Air cooled version)*

***INSUFFICIENT FLOW OF COOLING WATER** (Water cooled version)*

***FAN MOTOR OUT OF OPERATION** (Air cooled version)*

AMBIENT TEMPERATURE HIGHER THEN 43°C (110°F)

it causes the total and immediate SHUT-OFF of the machine in order to prevent the unit from operating in abnormal and dangerous conditions.
*When the ice maker stops on account of this protective device, there is a simultaneous glowing of the **RED LED**, warning the user of the **Hi Temperature** situation.*
The machine will remain in OFF mode for one hour then it will restart automatically.
In case the unit trips OFF again in alarm for 3 times in 3 hours, the machine SHUTS OFF DEFINITIVELY.
After having eliminated the source of the excessive condenser temperature, to restart the ice machine it is necessary to unplug and plug in again.

*The **RED LED starts blinking** and three minutes later the flaker unit resume its normal operating mode. The condenser temperature sensor has a further safety function which consist in preventing the unit from operating in Lo-ambient conditions i.e. when the condenser temperature - equivalent to the ambient temperature - is **lower then 1°C 34°F** (Fig.6).*
As soon as the ambient temperature rises up to 5°C the P.C. Board restarts automatically the machine on the three minutes starting time.

The refrigerant suction or Lo-pressure sets - in normal ambient conditions - on the value of **0.5 bar (7 psig)** on SP125 and of **2.4÷2.6 bar (34÷36 psig)** on SP255, SPN405-605 and SPN 1205 after few minutes from the unit start-up. This **value can vary of 0.1 or 0.2 bar (1.5÷3 psig)** in relation to the water temperture varia-tions influencing the freezer cylinder.

***NOTE**. If, after ten minutes from the unit start up, no ice is made and the evaporating temperature detected by the evaporator sensor results to be higher than -1°C (30°F) the ice maker stops and the **5th WARNING YELLOW LED** blinks.*
The machine will remain in OFF mode for one hour then it will restart automatically.
In case the unit trips OFF again in alarm for 3 times in 3 hours, the machine SHUTS OFF DEFINITIVELY.

FIG. 6

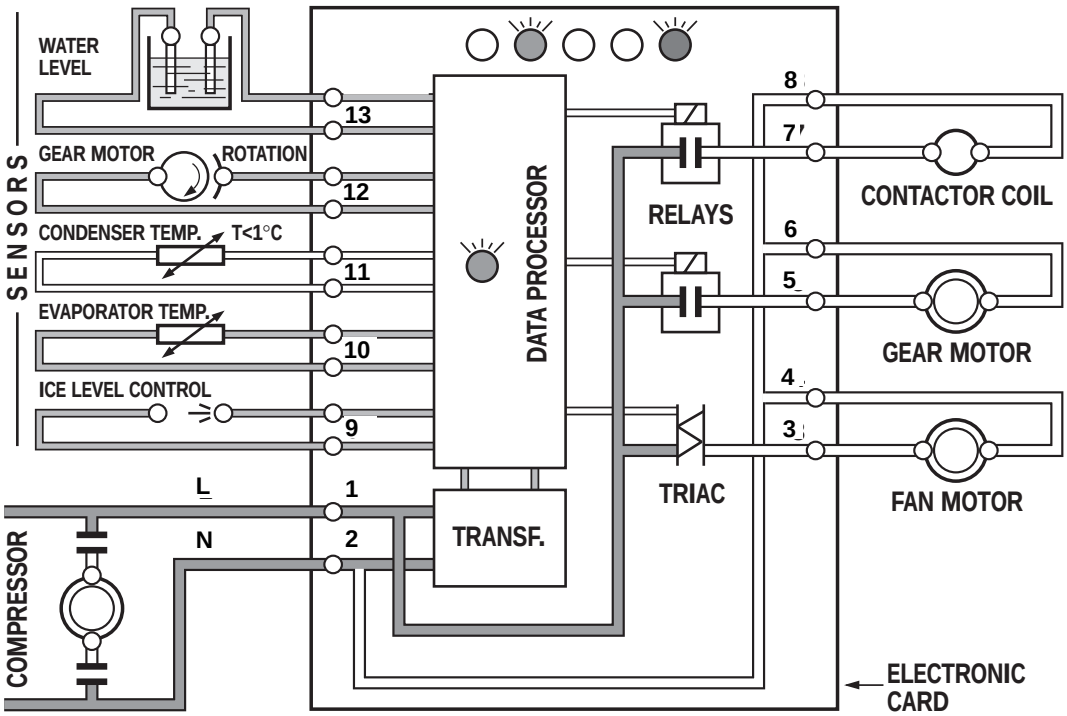

MECHANICAL SYSTEM

The mechanical system of the SIMAG Flaker machines consists basically of a gear motor assembly (two on model SPN1205) which drives, through a ratched coupling, a worn shaft or auger placed on its vertical axis within the freezing cylinder (two on model SP 1205).
The gear motor is made of a single phase electric motor with a permanent capacitor. This motor is directly fitted in the gear case through which it drives - in counter clockwise rotation at a speed of 9.5 r.p.m. - the freezer auger being linked to it by the ratched coupling.

***NOTE**. In the event the gear motor (one of the two on SPN1205) will tend to rotate in the wrong direction (counterclockwise) or not rotating at all or rotating at lower speed the unit will **stop immediately** with the glowing of the **WARNING YELLOW LED** on account of the intervention of the **Electromagnetic Safety Device** - based on Hall Effect principle. After having diagnosed and eliminated the source of the gear motor wrong rotation, to restart the unit it is necessary to press the RE-SET push button or switch OFF and ON the power line main disconnnect switch (Fig. 7).*

*The machine will remain in OFF mode for one hour then it will restart automatically.
In case the unit trips OFF again in alarm for 3 times in 3 hours, the machine SHUTS OFF DEFINITIVELY.
The RED LED will start blinking and after 3 minutes the ice maker will resume its total operations by running first the gear motor and then the compressor.*

Too low ambient and water temperature (well below the limitations of respectively 10°C and 5°C - 50°F and 40°F) or frequent interruptions of the water supply to the freezing cylinder (clogging of the water hose connecting the float reservoir to the water inlet at the bottom of the freezer) may cause the ice to get too hard and compact loosing fluidity and thereby seizing the auger.
This situation will put under excessive strain and load the entire drive system and freezer bearings.

FIG. 7

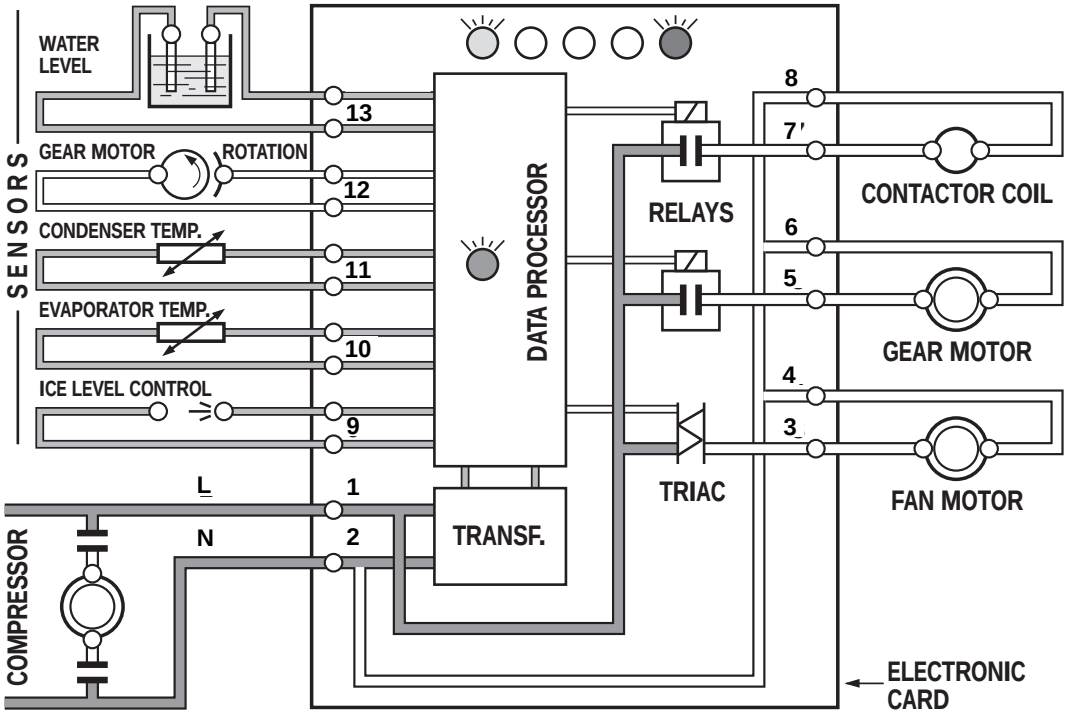

REFRIGERANT METERING DEVICE:

capillary tube

REFRIGERANT CHARGE (R 134 A)

	Air cooled	Water cooled
SP 125	440 gr	400 gr

REFRIGERANT CHARGE (R 404 A)

	Air cooled	Water cooled
SP 255	660 gr	520 gr
SPN 405	750 gr	600 gr
SPN 605	880 gr	820 gr
SPN 1205	**2**400 gr	1200 gr

***NOTE**. Before charging the refrigerant system always check the type of refrigerant and quantity as specified on the individual ice machine dataplate. The refrigerant charges indicated are relatives to averages operating conditions.*

OPERATING PRESSURES (With 21°C ambient temperature)

Discharge pressure:	**SP 125**	**SP 255/SPN405-605**	**SPN 1205**
Air cooled version	8 ÷ 9 bar	17 ÷ 18 bar	17 ÷ 18 bar
Water cooled version	8,5 bar	17 bar	17 bar
Suction pressure:	0,5 bar	2.5 bar	2.4 bar

COMPONENTS DESCRIPTION

A. EVAPORATOR TEMPERATURE SENSOR

The evaporator sensor probe is inserted into its tube well, which is welded on the evaporator outlet line, it detects the temperature of the refrigerant on the way out from the evaporator and signals it by suppling a low voltage current flow to the P.C. Board.
According to the current received, the micro-processor let the ice maker to continue its operations or not. In case the evaporating temperature, after 10 minutes from the unit start-up, does not go below -1°C (30°F) the evaporator sensor signals to stop immediately the unit operation, with the **blinking of the 5th Warning YELLOW LED.**

> ***NOTE.*** *The machine will remain in OFF mode for one hour then it will restart automatically.*
> *In case the unit trips OFF again in alarm for 3 times in 3 hours, the machine SHUTS OFF DEFINITIVELY.*
> *To restart the unit after the shutoff caused by the hi evaporating temperature, it is necessary to switch OFF and ON the power line main disconnect Switch.*

B. WATER LEVEL SENSOR

This sensor consists of two small stainless steel rods vertically fitted on the inner face of the reservoir cover and electrically connected to the low voltage circuit of the P.C. Board. When the cover of the reservoir is positioned in its place the tips of both the rods dip into the reservoir water transmitting a low power current throu the same.

> ***NOTE****. In the event of* ***shortage of water*** *in the reservoir or, in case the water used is too soft (de-mineralized) to cause greater resistence to the current flow (electrical conductivity lower than 30 µS) this sensor system causes the* ***shutoff of the machine****, to protect it from running without water or with an inadequate water quality. In this situation the* ***YELLOW LED*** *will glow to warn of the machine shutoff and the reason why.*

C. CONDENSER TEMPERATURE SENSOR

The condenser temperature sensor probe, located within the condenser fins (air cooled version) or in contact with the tube coil (water cooled version) detects the condenser temperature variations and signals them by supplying current, at low voltage, to the P.C. BOARD.
In case the condenser temperature sensor detects a temperature at the condenser lower than **+3°C (37°F)** that means ambient temperature too low for the correct unit operation, the sensor signals to the P.C. BOARD to do not start up the unit till the ambient temperature rises to 10°C.
In the air cooled versions, in relation to the different current transmitted, the micro processor of the P.C. BOARD supplies, through a TRIAC, the power at high voltage to the fan motor.
In the event the condenser temperature rises and reaches **60°C** or **70°C** according to the setting of DIP SWITCH number 8 the current arriving to the micro processor is such to cause an immediate and total stop of the machine operation.

> ***NOTE.*** *The machine will remain in OFF mode for one hour then it will restart automatically.*
> *In case the unit trips OFF again in alarm for 3 times in 3 hours, the machine SHUTS OFF DEFINITIVELY.*
> *To restart the unit after the shutoff caused by the hi condenser temperature, it is necessary to switch OFF and ON the power line main disconnect Switch.*

D. ELECTROMAGNETIC SENSOR (Two on SPN 1205 Model)

This safety device is housed on top of the Drive Motor (one per each motor on SPN 1205 model) and detects - based on Hall Effect principle - the rotating speed and rotating direction of the drive Motor.
Should the rotating speed drop below 1300 r.p.m. the magnitude measured by this device is such to signal to the microprocessor to stop the unit and light-up the YELLOW LED. The same reaction occures when the drive motor will tend to rotate in the wrong direction (counterclockwise) or when it doesn't rotate at all.

> ***NOTE.*** *The machine will remain in OFF mode for one hour then it will restart automatically. In case the unit trips OFF again in alarm for 3 times in 3 hours, the machine SHUTS OFF DEFINITIVELY. To restart the unit after the shutoff caused by this safety device, it is necessary first to eliminate the cause that has generated the intervention of the device and then switch OFF and ON the power line main disconnect switch.*

E. OPTICAL ICE LEVEL CONTROL (Two on SPN 1205 Model)

The electronic optical ice level control, located into the ice chute (one in each of the two ice chutes on SPN 1205 model), has the function to stop the operation of the ice machine when the light beam between the light source and the receiver gets interrupted by the flake ice which accumulates in the chute.
When the light beam is interrupted the Bin Full **YELLOW LED** located in the front of the P.C. BOARD blinks; in case the light beam gets interrupted for as longer as 6 seconds, the ice machine stops with the glowing-up of the **2nd YELLOW LED** to monitor the full ice bin situation.
The 6 seconds of delay prevents that any minimum interruption of the light beam due to the regular ice chuting through the ice chute may stop the operation of the unit.

As soon as the ice is scooped out (with the resumption of the light beam between the two infrared sensor of ice level control) 6 seconds later the ice machine resumes its operation with the simultaneous extinguishing the 2nd YELLOW LED.

F. P.C. BOARD (Data processor)

The **P.C. BOARD**, fitted in its plastic box located in the front of the unit, consists of two separated printed circuits one at high and the other at low voltage and protected by fuses. Also it consists of five aligned **LEDS** monitoring the operation of the machine of three jumpers (TEST used only in the factory, 60/70°C used to set up the PC Board at proper safety cut out condensing temperature and 3' to by pass the 3 minutes Stand By) and of input terminals for the leads of the sensor probes as well as input and output terminals for the leads of the ice maker electrical wires.
The P.C. BOARD is the brain of the system and it elaborates, through its micro processor, the signals received from the sensors in order to control the operation of the different electrical components of the ice maker (compressor, gear motor, etc.).
The five LEDS, placed in a row in the front of the P.C. BOARD, monitor the following situations:

GREEN LED
Unit under electrical power

YELLOW LED
- Blinking: **I/R beam cut** out
- Steady: unit shut-off at **storage bin full**

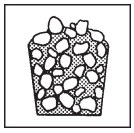

YELLOW LED
Unit shut-off due to a **too lo-water level** into float tank

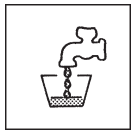

RED LED

ON all the time
- Unit shut-off due to a **too hi-condensing temperature**
- Unit shut-off due to a **too lo-ambient temperature <+1°C**

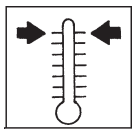

Blinking
3 minutes start up delay time

YELLOW LED

ON all the time
- Unit shut-off due to the **wrong rotation direction** of gear motor
- Unit shut-off due to the **too lo speed of gear motor**

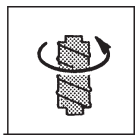

Blinking
- Unit shut-off due to a **too hi-evaporating temp. >-1°C** after 10 min of operation

YELLOW AND RED LED

- Blinking: **Evaporator sensor out of order**
- Steady: **Condenser sensor out of order**

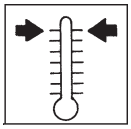

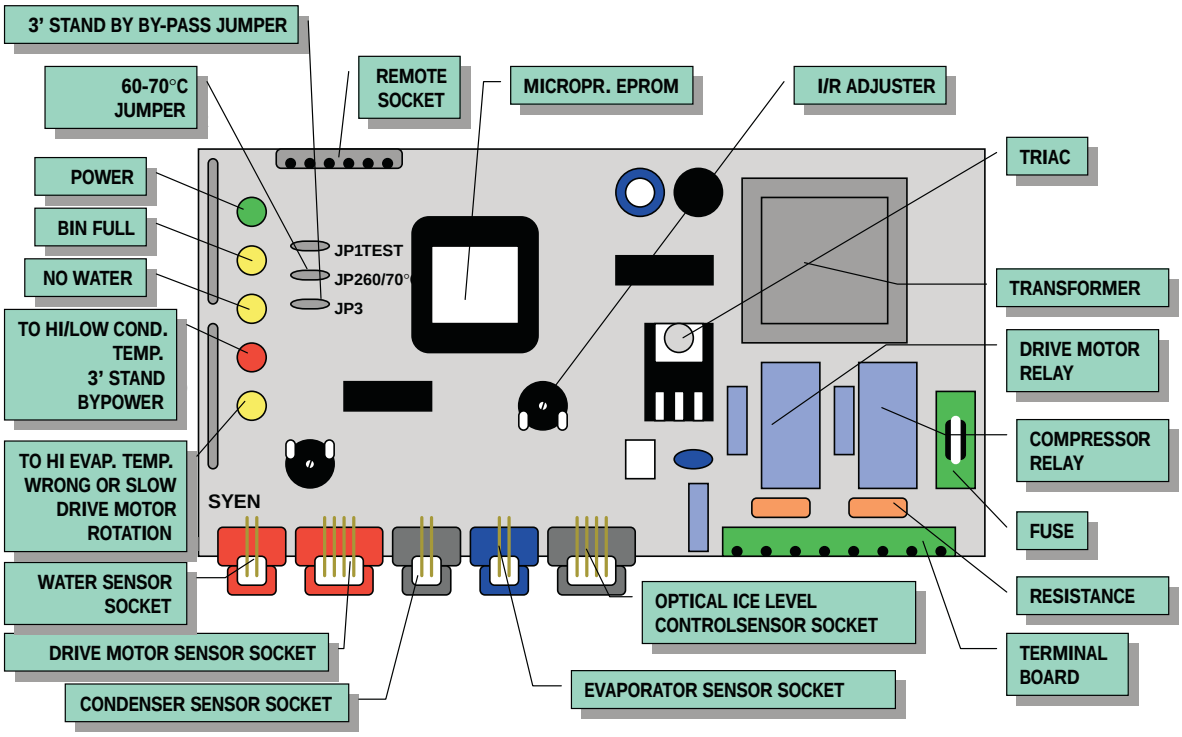

G. JUMPERS

The Flaker PC Board is equipped by three jumpers:

J1 · TEST: Used in the factory to energise all the electrical components during the Testing Mode.
Used to by-pass the 3' stand by time (just jump the contacts with PC Board under power).

J2 - SYEN
J3 - Pro. El. Ind.
· 60/70°C: Used to set up the Cut Out temperature of the condenser sensor:
- Jump OUT = 60°C
- Jump IN = 70°C

J3 - SYEN
J2 - Pro. El. Ind.
· 3'/60': Used to set up the start up delai time:
- Jump IN = 3'
- Jump OUT = 60'

H. INTERFACE P.C. BOARD (Only on SPN 1205 Model)

Used only on MF 61 model, it allows to elaborate the signal received from both the electromagnetic sensors as well as from both the optical ice level controls transmitting it to the P.C. Board for the control of the unit operation.
The Interface P.C. Board is equipped by four INLET sockets (two for the electromagnetic sensors and two for the optical ice level controls) and two OUTLET plugs to be connected to the sockets of the main P.C. Board.

I. FLOAT RESERVOIR

The float reservoir consist of a plastic water pan on which is fitted a float valve with its setting screw. The float valve modulate the incoming water flow to maintain a constant water level in the reservoir, level that corresponds to the one in the freezing cylinder to ensure proper ice formation and fluidity.
On the inner side of the reservoir cover are fitted the two water level sensor pins which detects the presence or the shortage of water in the reservoir.

NOTE. *It is very important to make sure of the correct fitting of the cover on the reservoir in order to enable the sensor to efficiently control the water situation avoiding undue shutoff interventions.*

J. FREEZING CYLINDER or EVAPORATOR (Two on SPN 1205 Model)

The freezing cylinder is made of a stainless steel vertical tube on which exterior is wrapped around the cooling coil with the evaporating chamber and in its interior is located the auger which rotates on its vertical axis and it is maintained aligned by the top and bottom bearings. A water seal system is located in the bottom part of the freezer while at the top end is fitted the ice breaker.
The water constantly flowing into the cylinder bottom part, freezes into ice when in contact with the cylinder inner walls. The ice is then lifted up by the rotating auger and compacted and forced out by the ice breaker.

K. ICE BREAKER (Two on SPN 1205 Model)

The ice breaker is fitted in the freezer upper part it has, on MF 20-30 Model, two breaker teeth to break the ice and with its slanted shape from the rear tooth to the front one it compacts and forces the ice out in an horizontal way.
On the other models the ice breaker is made by several rectangular openings where the ice is forced to pass through.
By undergoing this, the ice looses its excess of water content so it drops into the bin in hard dry bits of ice.
In the ice breaker it is housed the top bearing which is made of two rolls bearings positioned to withstand the auger axial and radial loads. This bearing is lubricated with a food grade - water resistant grease.

NOTE*. It is advisable to check the conditions of both the lubricant grease and the top bearing every six months.*

L. GEAR MOTOR (Two on SPN 1205 Model)

The gear motor is made of a single phase electric motor with permanent capacitor directly fitted on a gear box.
The drive motor rotor is kept aligned on its vertical axis by two ball bearings permanently lubricated. The gear case contains a train of three spur gears with the first one in fiber to limit the noise level. All the three gears are encased in case roller bearings and are covered by lubricant grease (MOBILPLEX IP 44).
Two seal rings, one fitted on the rotor shaft and the other on the output shaft keep the gear case sealed.
The interior can be inspected and serviced by unbolting the two halves of the aluminium gear case housing.

M. FAN MOTOR (Air cooled version)

The fan motor is controlled through the TRIAC of the P.C. BOARD by the condenser temperature sensor. Normally it operates to draw cooling air through the condenser fins.
In cold ambient situation, the fan motor can run at intermittance as the condenser pressure must be kept between two corresponding head pressure values.

N. WATER REGULATING VALVE (Water cooled version)

This valve controls the head pressure in the refrigerant system by regulating the flow of water going to the condenser.

As pressure increases, the water regulating valve opens to increase the flow of cooling water.

O. COMPRESSOR

The hermetic compressor is the heart of the refrigerant system and it is used to circulate and retrieve the refrigerant throughout the entire system.
It compresses the low pressure refrigerant vapor causing its temperature to rise and become high pressure hot vapor which is then released through the discharge valve.

ADJUSTMENT, REMOVAL AND REPLACEMENT PROCEDURES

***NOTE**. Read the instructions throughly before performing any of the following adjustment or removal and replacement procedure.*

A. ADJUSTEMENT OF THE EVAPORATOR WATER LEVEL

The correct water level in the freezing cylinder is about 20 mm. (1") below the ice discharge opening. Low water level causes excessive strain inside the freezer assembly due to a faster freezing rate.

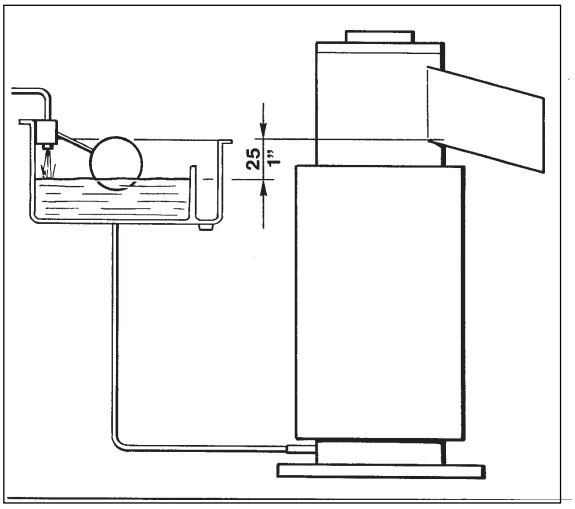

When the water level is above or below the correct one, adjustment can be performed by raising or lowering at the measure required, the water reservoir and its mounting bracket.

To Raise or Lower the water level:

a. Loosen and remove the screw securing the mounting bracket of the water reservoir to the unit cabinet and raise the water reservoir to the correct level.

b. Thread the mounting screw in the corresponding hole and tighten it.

WARNING. Be sure the electrical power supply circuit breaker and the inlet water supply are OFF, before starting any of the following Removal and Replacement procedures as a precaution to prevent possible personal injury or damage to the equipments.

B. REPLACEMENT OF EVAPORATOR TEMPERATURE SENSOR

1. Remove the front/top panel.

2. Remove the insulation from the refrigerant tubing, connecting the freezer to the accumulator, to gain access to the sensor probe holder and pull it out .

3. Trace the evaporator sensor terminal plug (blue color) on the rear side of the control box and remove it from its socket by carefully pulling out the terminal plug securing clip.

4. To install the replacement evaporator sensor follow the above steps in reverse.

C. REPLACEMENT OF CONDENSER TEMPERATURE SENSOR

1. Remove the front /top panel and on SPN1205 model even the right side panel.

2. Trace the condenser sensor probe located within the condenser fins on air cooled version and withtrow it.
On water cooled version remove it by opening the plastic strap (reusable) securing the probe to the refrigerant liquid line.

3. Trace the condenser sensor terminal plug (black color) on the rear side of the control box and remove it from its socket by carefully pulling out the terminal plug securing clip.

4. To install the replacement condenser sensor follow the above steps in reverse.

D. REPLACEMENT OF THE OPTICAL ICE LEVEL CONTROL

1. On SP 125, SP 255, SPN405 and SPN605 remove the front/top panel, while on SPN 1205 remove the front and rear panels.

2. Trace the optical ice level control terminal plug (black with four terminal pins) on the rear side of the control box and draw it out from its socket by carefully slackening the fastening tie.

3. Unloose the two securing screw and remove the optical ice level control from the plastic ice chute.

4. To install the replacement optical ice level control follow the above steps in reverse.

E. REPLACEMENT OF THE GEAR MOTOR MAGNETIC SENSOR

1. On SP 125, SP 255, SPN405 -605 remove the front/top and side/rear panels and on SPN 1205 remove the front, top and left side panels.

2. Unloose the three screws securing the plastic cover to the top of the gear motor and remove it.

3. Unloose the two screws securing the magnetic sensor to the plastic housing and withdraw it from its seat.

4. Trace the gear motor magnetic sensor terminal plug on the rear side of the control box (red with four terminal pins) and draw it out from its socket by carefully slackening the fastening tie.

5. To install the replacement gear motor magnetic sensor follow the above steps in reverse.

F. REPLACEMENT OF THE WATER LEVEL SENSOR

1. Remove the front /top panel.

2. Unloose the two nuts securing the wire leads to the two metal rods located on the water reservoir plastic cover.

3. Trace the water level sensor terminal plug (red color) on the rear side of the control box and draw it out from its socket by carefully slackening the fastening tie.

4. To install the replacement water level sensor follow the above steps in reverse.

G. REPLACEMENT OF P.C. BOARD

1. Remove front/top panel.

2. Remove all sensor terminal plugs, located on the rear side of P.C. Board, by carefully releasing them out from their sockets clips.

3. Unplug the connector from the rear side of P.C. BOARD then unloose the four screws holding the same to the plastic control box and remove it.

4. To install the replacement P.C. BOARD follow the above steps on reverse.

H. REPLACEMENT OF THE ICE SPOUT

1. Remove the front/top panel.

2. Unloose the wing nut and take off the ice chute from the ice spout paying attention to the optical ice level control.

3. Slacken and remove the two straps that hold the polystyre insulations against the ice spout.

4. On the model SP125-255 unthread the S.S. spout from the brass casting while on the other models unscrew the two bolts securing it to the ice breaker.

5. On model SP125-255 unloose and remove the two screws and separate the spout casting from the freezer cylinder.

> ***NOTE**. On model SP125-255 inspect the spout gasket and replace it if torn, cut or worn otherwise retain it to be used again.*

6. To install the replacement spout follow previous steps in reverse.

I. REPLACEMENT OF THE AUGER, WATER SEAL, BEARINGS AND COUPLING

1. Remove the front/top panel.

2. Follow the steps at item H to remove the ice spout.

3. On model SP125-255 unloose and remove two screws and washers holding tight the spout bracket to the freezing cylinder.

On models SPN405-605 and SPN 1205 unloose and remove the four bolts securing the ice breaker to the upper flange of the evaporator.

4. On model SP125-255 grasp the wire cap hook at the top of the freezer and pull out the auger, attached cap and ice breaker from the top of the freezer.

On models SPN405-605 and SPN1205 with two flat screwdrivers insert then on the space between the icebreaker and the upper flange and by tilting them lift the icebreaker and auger assembly. Grasp the icebreaker and remove the icebreaker and auger assembly by lifting them from the evaporator.

> ***NOTE**. If the auger cannot be pulled out, proceed to steps 10 and 11 of this paragraph, to gain access to the auger bottom. Then, with a rowhide mallet or placing a piece of wood on the bottom end of the auger, tap this bottom to break loose the auger and be able then to pull it out as per step 4 above.*

5. On model SP125-255, with a circlip plier, remove the retaining ring and cap hook from the ice breaker while, on the superflaker models, remove the plastic cap using a screwdriver as a lever.

6. Unloose and remove cap screw and remove the ice breaker from the auger.

7. Clean away the old grease from the interior of the ice breaker and inspect the bearing pressed into the top of the ice breaker and if worn do not hesitate to replace it.

8. Inspect the conditions of the O ring; if torn or worn replace it.

WARNING. The top bearing assembly works in critical conditions for what concern its lubrication as it is haused in the ice breaker where the formation of condensation is usual. Therefore it is important to apply on it an ample coating of Food grade Waterproof Grease before installing the breaker and cap hook in place.

9. Slide off from the auger bottom the upper half of the water seal.

***NOTE**. Any time the auger is removed for replacement or inspection use extra care in handling the water seal parts, so no dirt or foreign matters are deposited on the surfaces of the seal. If there is any doubt about the effectiveness of the water seal or O ring do not hesitate to REPLACE THEM.*

10. Unloose and remove the three/four bolts which attach the freezer assy to the aluminium adaptor.

11. Raise the freezer assy off the adaptor, secure it out of the way to allow room to work. On SP125-255 using a suitable lenght and size wooden dowel or stick inserted through the top of the open freezer, tap the lower half of the water seal and the lower bearing out the bottom of the freezer.

12. On the superflaker models, with two screwdrivers as a lever, remove from the bottom of the freezer assy the lo bearing brass holding ring.

***NOTE**. It is good practice to replace the water seal assy and both the top and the bottom bearings any time the auger is removed. To facilitate this it is available a service Kit (P/N 001028.07 for SP125-255 and P/N 001028.08 for SP N405-605-1205) which includes besides the above mentioned parts, the ice breaker O ring and a tube of food grade waterproof grease.*

13. Reach through the adaptor and remove the coupling parts.

14. Check both the coupling halves for chipping and wear and do not hesitate to replace them.

15. Install the bottom bearing into its brass housing paying attention to have the white plastic ring facing up.

16. Install the upper bearing into the ice breaker starting by the radial portion that must be fitted with the flat surface facing up.

17. Apply some lubricant (grease) on the upper surface then install the rollers cage with the smaller openings of the same facing up so to leave a small gap between plastic cage and flat surface of the botton portion of the bearing (see drawing).

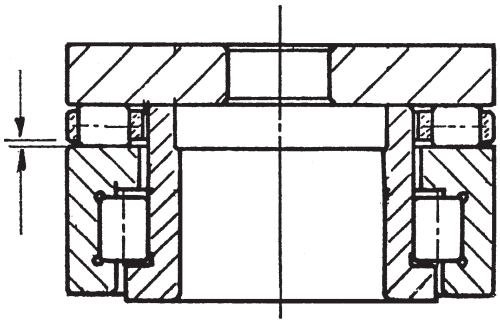

18. Apply some move lubricant then place the S.S. trust washer.

19. After to have replace the O ring into the ice breaker fit the same on top of the auger and secure it with the top bolt.

20. Install the auger/icebreaker into the evaporator following the previous steps in reverse.

J. REPLACEMENT OF THE GEAR MOTOR ASSY

1. On SP125-255, SP405-605 remove the front/top and side/rear panels and on SPN1205 remove the front, rear, top and left side panels.

2. Remove the three/four bolts and washers securing the gear reducer base to the unit chassis, then remove bolts and lockwashers which attach the bottom of the aluminium adaptor to the gear reducer case cover.

3. Follow the steps of item E to remove the gear motor magnetic sensor.

4. Trace and disconnect the electric wires leads of the drive motor. Lift and remove the entire gear motor assembly.

5. To install the replacement gear motor assy follow the above steps in reverse.

K. REPLACEMENT OF FAN MOTOR

1. Remove the front/top and side/rear panels on models SP125-255, SPN405-SPN605 and the front panel on model SPN 1205.

2. Remove screws and yellow green ground wire. Trace the electrical leads of fan motor and disconnect them.

3. On the models SP125-255, SPN405-605 remove the bolts securing the fan motor bracket to the cabinet base and then remove the assembly.
On model SPN1205 unloose, with an allen key, the screw securing the fan blade hub to the fan motor shaft then unscrew the bolts holding the fan motor to its protection grid.

4. To install the replacement fan motor follow the above steps in reverse.

> ***NOTE**. When installing a new fan motor check that the fan blades do not touch any surface and move freely.*

L. REPLACEMENT OF DRIER

1. Remove the front/top and side/rear panels on models SP125-255, SPN405-605 and the front panel on model SPN1205.

2. Recover the refrigerant from the system and transfer it in a container so to reclaim or recycle it.

3. Unsolder the refrigerant lines from the two ends of the drier (the capillary tube from one side on SP255).

4. To install the replacement drier remove factory seals and solder the refrigerant lines and the capillary tube taking precautions to NOT OVERHEAT the drier body.

5. Thoroughly evacuate the system to remove moisture and non condensable after drier replacement.

6. Charge the system with proper refrigerant by weight (see data plate of machine) and check for leaks.

7. Replace panels previously removed.

M. REPLACEMENT OF THE FREEZING CYLINDER

1. Follow the steps at item H to remove the ice spout.

2. Remove the clamp fastening the water hose to the water inlet port of the freezer assy. Place a water pan under this water inlet port then disconnect the water hose and collect all water flowing from freezer and from water hose.

3. Withdraw the evaporator sensor probe from the its holder as stated in item B.

4. Recover the refrigerant from the system and transfer it in a container so to reclaim or recycle it.

5. Unsolder and disconnect the capillary tube and the accumulator/suction line assy from the outlet line of the freezing cylinder.

6. Remove the three/four bolts and washers securing the gear reducer base to the unit chassis, then remove bolts and lockwashers which attach the bottom of the aluminium adaptor to the gear reducer case cover.

7. Lift the freezer up and off the gear motor assembly, then if necessary remove the aluminium adaptor by removing the three mounting screws and lockwashers.

> ***NOTE**. It is imperative to install a replacement drier whenever the sealed refrigeration system is open.*
> *Do not replace the drier until all other repairs or replacements have been completed.*

8. To install the replacement evaporator follow the above steps in reverse.

> ***NOTE**. Thoroughly evacuate the system to remove moisture and non condensables after evaporator replacement.*

N. REPLACEMENT OF AIR COOLED CONDENSER

1. Remove front/top and side/rear panels on models SP125-255, SPN405 and top SPN 605 and the front and right side panel on model SPN 1205.

2. Remove from the condenser fins the condenser ambient temperature sensor probes.

3. Remove the two bolts attaching the condenser to the base.

4. Recover the refrigerant from the system and transfer it in a container so to reclaim or recycle it.

5. Unsolder the refrigerant lines from the condenser and remove it from the unit.

> ***NOTE**. It is imperative to install a replacement drier whenever the sealed refrigeration system is open.*
> *Do not replace the drier until all other repairs or replacements have been completed.*

6. To install the replacement condenser follow the above steps in reverse.

> ***NOTE**. Thoroughly evacuate the system to remove moisture and non condensables after condenser replacement.*

O. REPLACEMENT OF WATER COOLED CONDENSER

1. Remove front/top and side/rear panels on models SP125-255, SPN405-605 and the front and right side panel on model SPN1205.

2. Remove the condenser temperature sensor probes from condenser.

3. Remove bolts which secure the condenser to the unit base.

4. Remove the corbin clamps and disconnect the plastic hoses from the water cooled condenser.

5. Recover the refrigerant from the system and transfer it in a container so to reclaim or recycle it.
6. Unsolder the refrigerant lines from the condenser and remove it from the unit.

> ***NOTE**. It is imperative to install a replacement drier whenever the sealed refrigeration system is open.*
> *Do not replace the drier until all other repairs or replacements have been completed.*

7. To install the replacement condenser follow the above steps in reverse.

> ***NOTE**. Thoroughly evacuate the system to remove moisture and non condensables after condenser replacement.*

P. REPLACEMENT OF WATER REGULATING VALVE (WATER COOLED MODELS)

1. Remove the front/top and side/rear panels on models SP125-255, SPN405-605 and left side panel on model SPN 1205.

2 Close the shut-off valve on the water supply line and disconnect it at the rear of the flaker.

3. Remove corbin clamp and disconnect the water hose from the outlet of water regulating valve.

4. Unloose the nut securing the water regulating valve to the unit frame.

5. Recover the refrigerant from the system and transfer it in a container so to reclaim or recycle it.

6. Trace the water regulating valve capillary tube and unsolder its end from the refrigerant line then remove it from the unit.

> ***NOTE**. It is imperative to install a replacement drier whenever the sealed refrigeration system is open. Do not replace the drier until all other repairs or replacements have been completed.*

7. To install the replacement water regulating valve follow the above steps in reverse.

> ***NOTE**. Thoroughly evacuate the system to remove moisture and non condensables after water regulating valve replacement.*

> ***NOTE**. The water flow that passes through the valve can be adjusted by means of the valve setting stem in order to have a condensing pressure of 8.5 bar on SP125 and of 17 bar on SP255 SPN 405-605-1205*

Q. REPLACEMENT OF COMPRESSOR

1. Remove front/top and side/rear panels on models SP125-255, SPN405-605 and the front panel on model SPN 1205.

2. Remove the cover and disconnect the electrical leads from the compressor junction box.

3. Recover the refrigerant from the system and transfer it in a container so to reclaim or recycle it.

4. Unsolder and disconnect both the suction line and the discharge line from the compressor.

5. Remove the four compressor mounting bolts and the compressor from the unit base.

6. Unsolder suction and process header from compressor and retain it to be used on new compressor.

> ***NOTE**. Always install a replacement drier whenever the sealed refrigeration system is open.*
> *Do not replace the drier until all other repairs or replacements have been completed.*

7. To install the replacement compressor follow the above steps in reverse.

> ***NOTE**. Thoroughly evacuate the system to remove moisture and non condensables after compressor replacement.*

WIRING DIAGRAM SP 125-255

AIR AND WATER COOLED

230/50/1

GV - YELLOW GREEN
B - WHITE
G - GREY
N - BLACK
A - BLUE
M - BROWN
V - GREEN

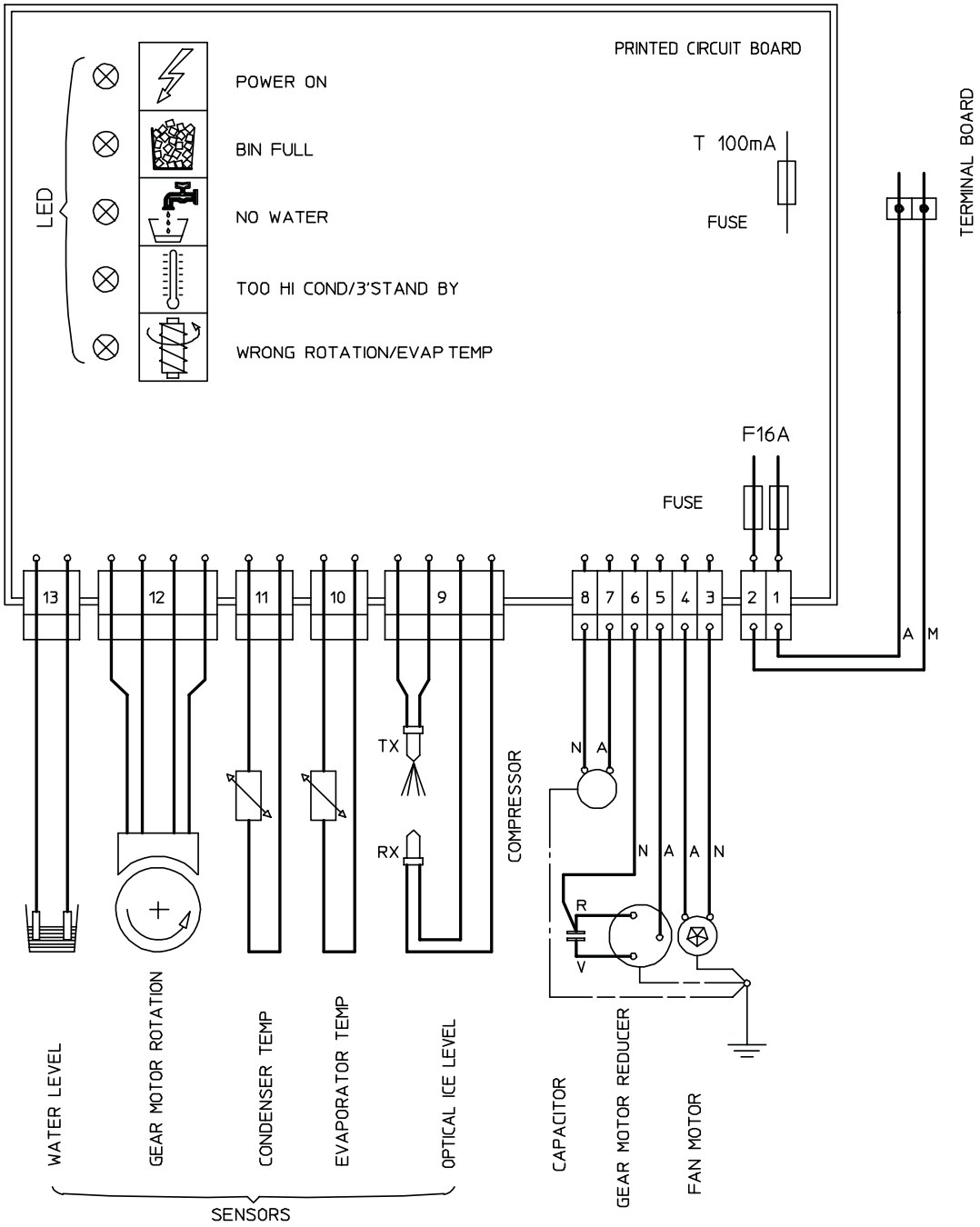

JUST FOR AIR COOLED UNIT

WIRING DIAGRAM SPN 405 -SPN 605

AIR AND WATER COOLED

SINGLE PHASE

GV - YELLOW GREEN
B - WHITE
G - GREY
N - BLACK
A - BLUE
M - BROWN
V - GREEN

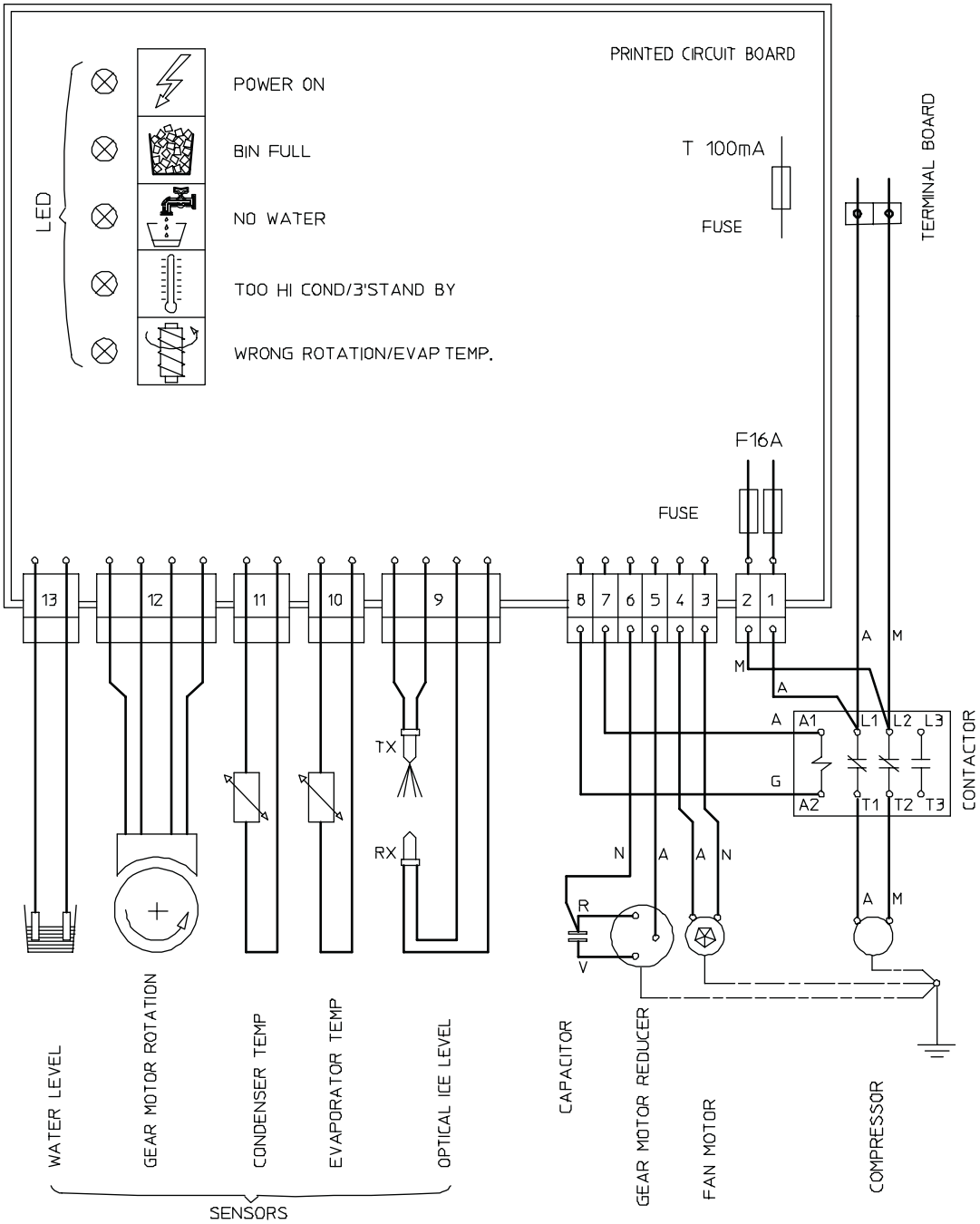

JUST FOR AIR COOLED UNIT

WIRING DIAGRAM SPN 605

AIR AND WATER COOLED

THREE PHASE

GV - YELLOW GREEN
B - WHITE
G - GREY
N - BLACK
A - BLUE
M - BROWN
V - GREEN

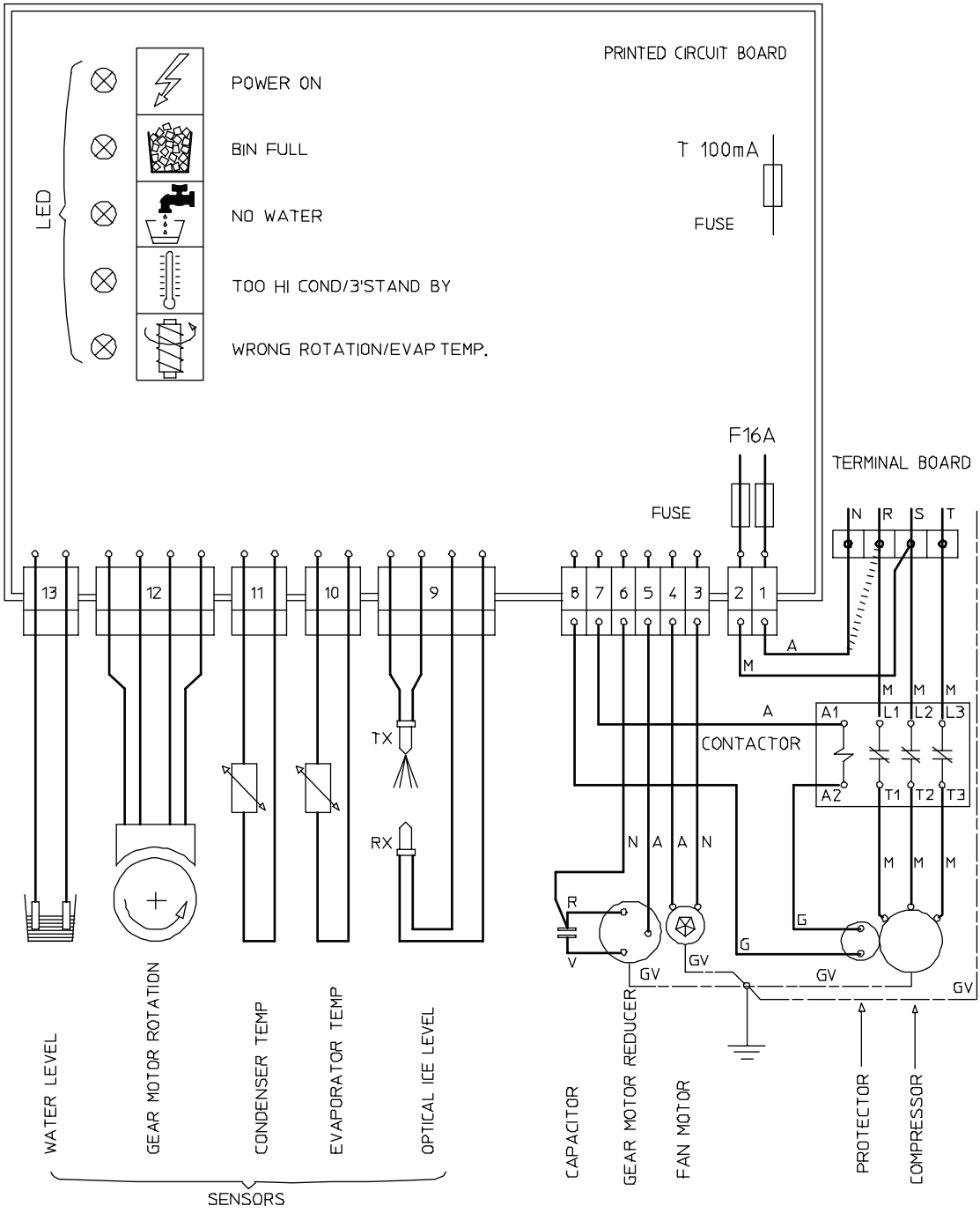

JUST FOR AIR COOLED UNIT

CONNECTION REPLACES NEUTRAL FOR MODEL 220/50-60/3

WIRING DIAGRAM SPN 1205

AIR AND WATER COOLED

THREE PHASE

GV - YELLOW GREEN
B - WHITE
G - GREY
N - BLACK
A - BLUE
M - BROWN
V - GREEN

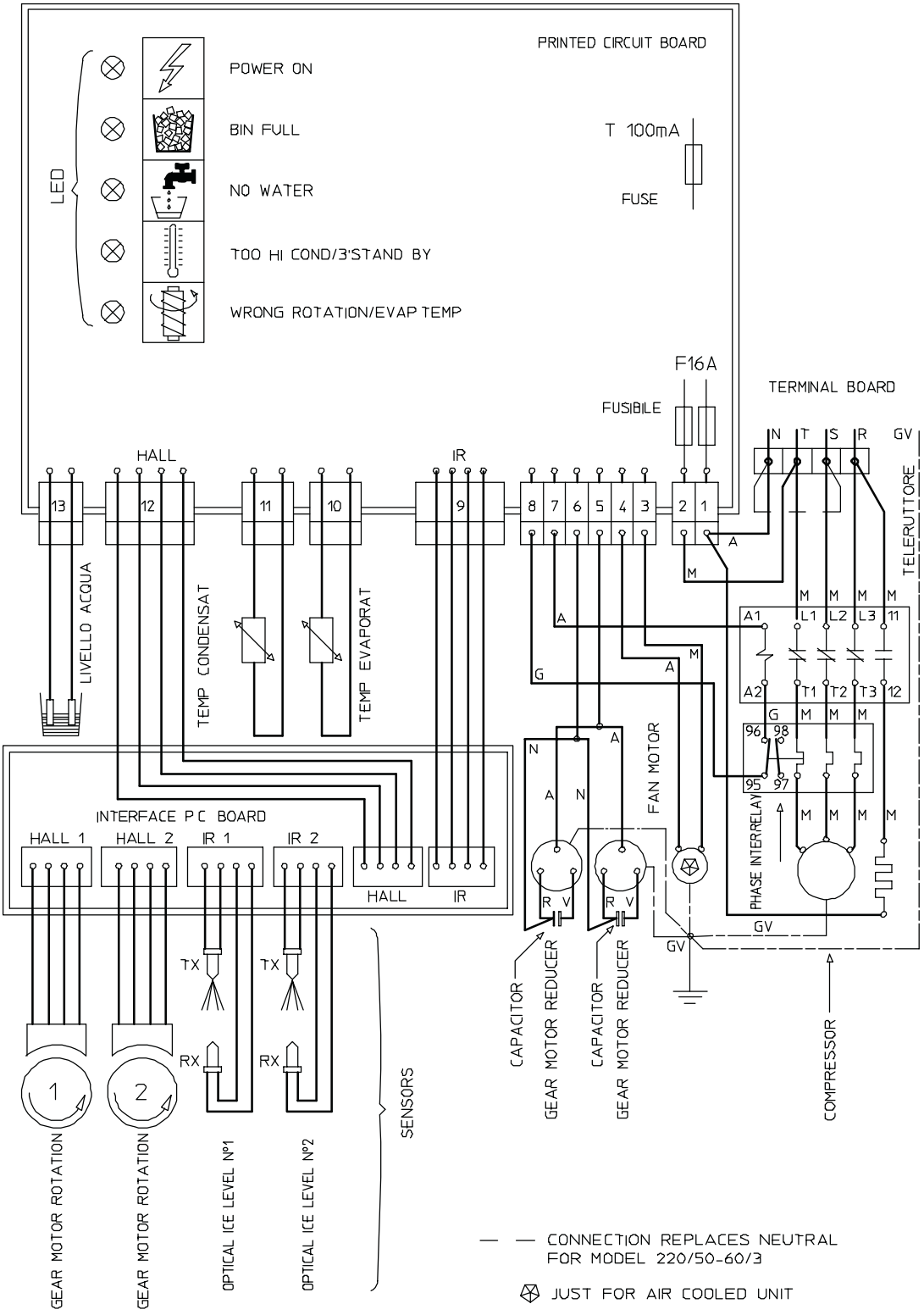

SERVICE DIAGNOSIS

SYMPTON	POSSIBLE CAUSE	SUGGESTED CORRECTION
Unit will not run No LED lighted-on	Blown fuse in P.C.Board	Replace fuse & check for cause of blown fuse
	Master switch in OFF position	Turn switch to ON position
	Inoperative P.C.Board	Replace P.C.Board
	Loose electrical connections	Check wiring
Bin full yellow LED glows with no ice in the bin	Inoperative or dirty ice level control	Replace or clean ice level control
No water yellow LED glows	Shortage of water	See remedies for shortage of water.
	Water too soft	Install a mineral salt metering device
Red-alarm LED glows	High head pressure	Dirty condenser. Clean INOPERATIVE fan motor. Replace
	Ambient temperature too low	Move unit in warmer location
Red-alarm LED blinks	3' stand by	None - Wait the elapsed of 3'
Reverse rotation yellow LED blinks	Too hi evap. temperature Shortage or lack of refrigerant	Check and charge refrigerant system
	Inoperative evaporator sensor	Replace
Reverse rotation yellow LED glows	Gear motor turns on reverse	Check stator winding and capacitor
	Too low gear motor rotating speed	Check rotor bearings, freezer bearings and interior of freezer for scores. Replace whatever worn or damaged.
	Drive motor doesn't turn	Check for power, open circuit, etc.
	Magnetic cylinder loose its magnetic charge	Replace magnetic cylinder.
Water yellow LED and red LED ON (steady) together	Inoperative Condenser Sensor	Replace it.
Water yellow LED and red LED blink together	Inoperative Evaporator Sensor	Replace it.
Compressor cycles intermittently	Low voltage	Check circuit for overloading Check voltage at the supply to the building. If low, contact the power company
	Non-condensable gas in system	Purge the system
	Compressor starting device with loose wires	Check for loose wires in starting device
Low ice production	Capillary tube partially restricted	Blow charge, add new gas & drier, after evacuating system with vacuum pump
	Moisture in the system	Same as above
	Low water level in the freezer	Adjust to approx 20 mm below ice spout
	Shortage of refrigerant	Check for leaks & recharge
	Pitted or stained auger surface	Clean or replace auger

SERVICE DIAGNOSIS

SYMPTON	POSSIBLE CAUSE	SUGGESTED CORRECTION
Wet ice	Ambient temperature too high	Move unit to cooler location
	Under or overcharge of refrigerant	Recharge with correct quantity
	High water level in the freezer	Lower to approx. 20 mm below ice spout
	Faulty compressor	Replace
	Worn out of the auger	Replace
Machine runs but makes no ice	Water not entering in the freezer	Air look in feed line to freezer. Vent it Clogged feed line to freezer. Clean it
	Drive motor or gear stripped	Check repair or replace
	Moisture in the system	Purge, replace drier and re-charge
Water leaks	Water seal leaking	Replace water seal
	Water feed line to freezer leaking	Check and fasten hose clamp
	Float valve not closing	Check and adjust float valve setting screw
	Spout leaking	Tighten screws holding the spout
Excessive noise or chattering	Mineral or scale deposit on auger and inner freezer walls	Remove and manually polish auger and inner walls of freezer barrel using emery paper
	Low suction pressure	Add refrigerant to rise suction pressure
	Water feed line to freezer clogged	Vent and clean it
	Low water level into freezer	Adjust to approx. 20 mm below ice spout
	Worn freezer bearings	Check and replace
Gear motor noise	Worn rotor bearings	Check and replace
	Shortage or poor lubricant in gear case	Check for proper lubr. opening gear case. Top of gears must be covered with lubr.
	Gear case bearings and racers worn out	Check and replace worn parts
Shortage of water	Strainer at water inlet fitting clogged	Remove strainer and clean
	Float reservoir water nozzle clogged-up	Remove float valve and clean nozzle

MAINTENANCE AND CLEANING INSTRUCTIONS

A. GENERAL

The periods and the procedures for maintenance and cleaning are given as guides and are not to be construed as absolute or invariable.
Cleaning, especially, will vary depending upon local water and ambient conditions and the ice volume produced; and, each icemaker must be maintened individually, in accordance with its particular location requirements.

B. ICEMAKER

The following maintenance should be scheduled at least two times per year on these icemakers.

1. Check and clean the water line strainer.

2. Remove the cover from the float reservoir - care to do not damage the two water sensors - and depress the float to make sure that a full stream of water enters into the reservoir.
If not gently remove the float valve from its reservoir bracket than clean the hole of the nozzle.

3. Check that the icemaker is levelled in side to side and in front to rear directions.

4. Check that the water level in the water reservoir is below the overflow but high enough that it does not run out of the spout opening.

5. Clean the water system, water reservoir and the interior of freezing cylinder using a solution of SIMAG Ice Machine Cleaner.
Refer to procedure C cleaning instructions and after cleaning will indicate frequency and procedure to be followed in local areas.

> ***NOTE**. Cleaning requirements vary according to the local water conditions and individual user operation.*

6. If required, polish the two sensor rods secured to the float reservoir cover, heavy scale sediment on them can be removed with the help of a bit of SIMAG Cleaner plain.

7. With the ice machine and fan motor OFF on air cooled models, clean condenser using vacuum cleaner, whisk broom or non metallic brush taking care to do not damage the condenser/ambient temperature sensor.

8. Check for water leaks and tighten drain line connections. Pour water down bin drain line to be sure that drain line is open and clear.

9. Check the ice level control sensor to test shut-off. Close the bottom of the ice chute and wait till it is completely full of ice so to cut off the light beam for at least 6 seconds.
This should cause the immediate blinking of the Bin Full YELLOW LED located in the front of P.C. Board and, 6 seconds later, the total stopping of the ice maker with the simultaneous light up of the same LED (steady).

> ***NOTE**. Test the operation of the Ice Level Control using ice NOT HAND.*

Within few seconds from the removal of the ice between the sensor lights the ice maker resume its operation.

> ***NOTE**. The ice level control uses devices that sense light, therefore they must be kept clean enough so they can "see".*
> *Every three months remove the optical system then clean/wipe the sensing "eyes" with a clean soft cloth.*

10. Check for refrigerant leaks and for proper frost line, which should frost as far as approx. 20 cm (8") from the compressor.
When doubtful about refrigerant charge, install refrigerant gauges on corresponding service valves and check for correct refrigerant pressures. (See Operating pressure at page 23 of this manual).

11. Check that fan blades move freely and are not touching any surfaces.

12. Remove the retaining ring and the hook and cap from the top of the freezer assembly then inspect the top bearing, wipe clean of all grease and apply a coating of food grade water proof grease.

> ***NOTE**. It is recommended to use only food grade and waterproof grease to lubricate the freezer top bearing.*

13. Check the quality of ice. Ice flakes should be wet when formed, but will cure rapidily to normal hardness in the bin.

> ***NOTE**. It is not abnormal for some water to emerge from the ice spout with the flaker ice.*

C. CLEANING INSTRUCTIONS OF WATER SYSTEM

1. Switch OFF the Master disconnect switch on the power line.

2. Remove all ice stored in the bin to prevent it from getting contaminated with the cleaning solution.

3. Shut close the water shutoff valve on water line.

4. Remove the top panels to gain access to the water reservoir.

5. Remove the float reservoir cover and with a piece of copper wire short the two metal pins of the water level sensor.

6. Place a water pan under the freezer water inlet port, disconnect the water hose from this port and allow the water from the freezer to flow into the pan.
Then refit the water hose to the freezer water inlet port.

7. Prepare the cleaning solution by diluting in a plastic container two or three liters of warm water (45°-50°C) with a 0,2-0,3 liters of **SIMAG** Ice Machine Cleaner (on SPN 1205 double the quantities).

WARNING. The SIMAG Ice Machine Cleaner contains Phosphoric and Hydroxyacetic acids. These compounds are corrosive and may cause burns if swallowed, DO NOT induce vomiting. Give large amounts of water or milk. Call Physician immediately. In case of external contact flush with water. KEEP OUT OF THE REACH OF CHILDREN

8. Pour the cleaning solution into the water reservoir.

9. After 15 minutes switch ON the Master switch to start the unit.

10. Wait till the machine starts to discharge ice, then continue to slowly pour the cleaning solution into the water reservoir taking care to maintain the level just below the overflow.

***NOTE**. The ice made with the cleaning solution is slushy and coloured also, it may tend to loose fluidity creating some resistence in being elevated and extruded; this situation can be heard by the noise made of the ice. Should this occure it is recommended to stop for few minutes the ice machine in order to allow the ice in the freezer to partially melt then restart again.*

11. When all the cleaning solution has been used up, open the water shutoff valve to allow new fresh water to flow into the reservoir. Let the unit to continue to run until the ice resumes the normal colour and hardness.

12. Stop the icemaker and pour warm water on the ice deposited into the storage bin to melt it up.

***NOTE**. DO NOT use ice produced with the cleaning solution. Be sure none remains in the bin.*

13. Pour into the water reservoir 1 cc. (approx 20 drops) of SIMAG Sanitiser (Antialgae P/N 264000.00) then switch the unit ON.

14. Left the unit running for approx 10 minutes then remove the copper wire used to jump the two sensors for the water level and place back correctly the cover on the float reservoir.

***NOTE**. DO NOT use ice produced with the sanitising solution.*

15. With a sponge moisted with a sanitising solution, wipe clean all the bin interior surfaces.

***REMEMBER**. To prevent the accumulation of undesirable bacteria it is necessary to sanitise the interior of the storage bin with an anti-algae disinfectant solution every week.*

SIMAG

ICE MACHINES

www.simag.it

SIMAG
via Risorgimento, 4
20017 Mazzo di Rho (MI) - Italy
Tel. +39 02 93900215 (Commerciale - Sales Dept.)
Tel. +39 02 93960357 (Assistenza - Service Dept.)
Fax +39 02 93900226 (Commerciale - Sales Dept.)
Fax +39 02 93960366 (Assistenza - Service Dept.)
e-mail: sales@simag.it
e-mail: service@simag.it

Singapore Office
SIMAG FAR EAST
627A Aljunied Road
04-04 Biztech Centre
Singapore 389842
Tel. ++65 6738 5393
Fax ++65 6738 1959
e-mail: scotsice@singnet.com.sg

Certified ISO 9001
TOTAL QUALITY